UniLine
door air curtains

UniLine / Cassette UniLine

High-output door air curtains,
quickly and inexpensively delivered

Technical catalogue

KAMPMANN
Genau mein Klima.

Kampmann.co.uk/uniline

Contents

01 Product Information 6

- Overview 7
- Product data 8
- Selection guide: Overview of models 9
- UniLine at a glance 10

02 Technical data 12

- Information on use 13
- UniLine AC, models 10 to 30 14
- UniLine EC, models 10 to 30 16
- Cassette UniLine AC, models 10 to 25 18
- Cassette UniLine EC, models 10 to 25 20

03 Design information 22

- Unit selection and combination options 24
- Selection process 26
- SAM – Silent AutoMotion 27
- Brackets 28
- UniLine: Fixing points and LPHW connection 29
- Cassette UniLine: Fixing points and LPHW connection 30

04 Controls 32

- Description of control for UniLine AC with electromechanical control 32
- UniLine AC door air curtains, electrical installation 33
- Description of control for UniLine AC with P-control (BMS-interface) 34
- Description of control for UniLine EC with electromechanical control 35
- UniLine EC door air curtains, electromechanical model (*00), electrical installation 37
- UniLine EC door air curtains, electromechanical model with fault monitoring (*T), electrical installation 39
- Description of KaControl 41
- UniLine AC and UniLine EC door air curtains with KaControl, electrical installation 44

05 Ordering information 46

- UniLine 46
- Cassette UniLine for 625 mm ceiling grid 47
- Cassette UniLine for 600 mm ceiling grid 48
- Accessories 49

UniLine door air curtains: Effective cold air screening for a comfortable interior climate.

Porsche Centre, Moscow:
The screening effect of UniLine door air curtains effectively counters heat losses and produces a comfortable interior climate.

01 Product information

UniLine – Low investment with top output

Encased door air curtains for visible installation or as an in-ceiling unit. For all standard applications.

Today open doors

are a natural part of the leisure "shopping" experience. An inviting open entrance with an unrestricted view of the goods on offer attracts more customers.
During the heating season, the screening effect of door air curtains creates a comfortable interior climate even when the doors are open. Customers enjoy a pleasant entrance into the store.
Thanks to the optional use of EC technology, UniLine door air curtains feature the most energy-efficient drive concept and can now be used wherever energy needs to be saved over the long term.

Use

This cost-effective model for use in DIY stores, garden centres and retail outlets etc., has technical features specifically tailored to this use:

- water and electrical connections are on the one side, protrude upwards or to the side (Cassette UniLine door air curtains) out of the casing, for ease of connection.
- UniLine door air curtains are very maintenance-friendly, thanks to the easy-to-open air intake grille with large easily removable filter.
- the lower casing panel can be hinged down for maintenance purposes.

Operating principle

Air is drawn by high-performance radial fans through the filter and the high-output copper/aluminium heat exchanger. The deflection grille in the air outlet ensures minimal turbulence and even discharge of the heated air.

Unit and casing, including top panel, form a compact unit.

- upper side closed
- decorative air intake grille and air outlet rectifier
- casing powder coated in RAL 9016 traffic white; air intake grille and outlet air rectifier in RAL 9006 (similar to) white aluminium
- extensive control accessories
- Cassette UniLine specifically designed for 625 mm or 600 mm ceiling grids

Installation sketch of UniLine 260

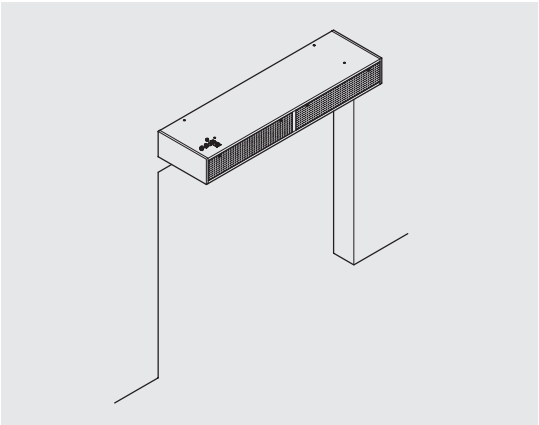

Installation sketch of Cassette UniLine

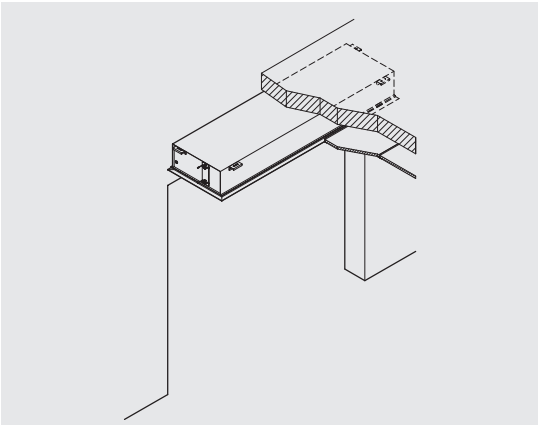

Product data

Product features

- energy efficiency through EC technology
- filters can be changed with ease without the need for a tool.
- low investment, top performance

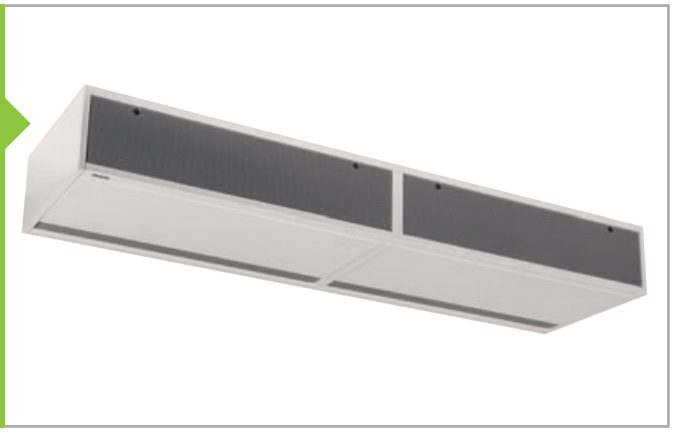

Features

- water and electrical connections protrude out of the top of the casing
- unit and casing form a compact unit

Heating
- LPHW

Installation
- wall- or ceiling-mounted, horizontal
- installation flush with the ceiling

KaControl
- optional

Connections
- heat exchanger connection 3/4"

Performance data

Heat output [1] [kW]
- 3.4 – 44.2

Air volume [2] [m³/h]
- 290 – 5330

Sound pressure level [3] [dB(A)]
- 27 – 64

Operating limits
- max. operating pressure: 10 bar
- max. entering water temperature: 90 °C
- min. entering air temperature: 6 °C
- max. air outlet temperature: 40°C [4]

Applications

UniLine door air curtains efficiently screen cold outside air at open doorways.

Retail chains | Showrooms and retail outlets | Restaurants and cafés | Public buildings

[1] at LPHW 75/65 °C, t_{L1} = 20 °C
[2] at low to medium pressure, requirements and conditions, see page 23
[3] The sound pressure levels were calculated based on an assumed room insulation of 16 dB(A). This corresponds to a distance of 3 m, a room volume of 2000 m³ and a reverberation time of 1.0 s (in accordance with VDI 2081).
[4] The use of an outlet temperature limiting valve is essential with leaving air temperatures of > 40°C

Selection guide: Overview of models

Model	Design	Motor	Max. discharge height[1]	Max. door width	Air volume[2]	Heat outputs[3]	Outlet air temperature[3]	Sound pressure level[4]	Sound power level	Further information
			[m]	[m]	[m³/h]	[kW]	[°C]	[dB(A)]	[dB(A)]	
10	UniLine	AC	2.3 - 3.0	1.0	600 - 1390	6.7 – 10.2	41.6 – 52.6	38 - 59	54 - 75	Page14
		EC			290 - 1410	3.4 – 10.3	41.5 – 54.8	27 - 56	43 - 72	Page16
	Cassette UniLine	AC			600 - 1390	6.7 – 10.2	41.6 – 52.6	38 - 59	54 - 75	Page18
		EC			290 - 1410	3.4 – 10.3	41.5 – 54.8	27 - 56	43 - 72	Page20
15	UniLine	AC	2.3 - 3.0	1.5	930 - 2130	9.6 – 17.4	44.0 – 50.5	39 - 60	55 - 76	Page14
		EC			410 - 2540	5.3 – 19.5	42.6 – 58.2	31 - 57	47 - 73	Page16
	Cassette UniLine	AC			930 - 2130	9.6 – 17.4	44.0 – 50.5	39 - 60	55 - 76	Page18
		EC			410 - 2540	5.3 – 19.5	42.6 – 58.2	31 - 57	47 - 73	Page20
20	UniLine	AC	2.3 - 3.0	2.0	1210 - 2820	13.1 – 24.2	45.2 – 51.9	41 - 61	57 - 77	Page14
		EC			580 - 2820	7.6 – 24.1	45.1 – 58.7	30 - 59	46 - 75	Page16
	Cassette UniLine	AC			1210 - 2820	13.1 – 24.2	45.2 – 51.9	41 - 61	57 - 77	Page18
		EC			580 - 2820	7.6 – 24.1	45.1 – 58.7	30 - 59	46 - 75	Page20
25	UniLine	AC	2.3 - 3.0	2.5	1660 - 4000	18.0 – 33.9	44.9 – 51.8	42 - 62	58 - 78	Page14
		EC			710 – 3980	9.6 – 33.7	44.9 – 59.7	33 - 60	49 - 76	Page16
	Cassette UniLine	AC			1660 - 4000	18.0 – 33.9	44.9 – 51.8	42 - 62	58 - 78	Page18
		EC			710 – 3980	9.6 – 33.7	44.9 – 59.7	33 - 60	49 - 76	Page20
30	UniLine	AC	2.3 - 3.0	3.0	2210 - 5330	24.1 – 44.2	44.4 – 52.1	44 - 64	60 - 80	Page14
		EC			810 - 5080	11.1 – 42.8	44.8 – 60.3	34 - 60	50 - 76	Page16

Sectional views

UniLine

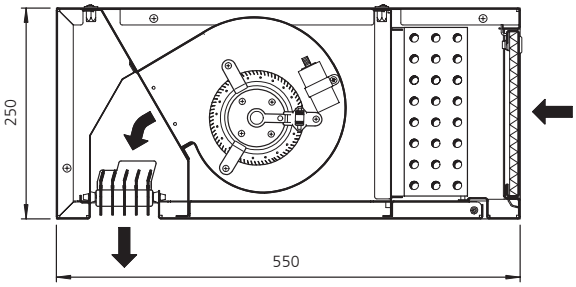

Cassette UniLine

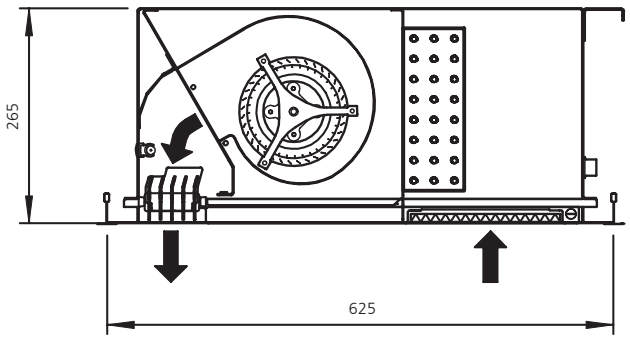

[1] at low to medium pressure, requirements and conditions, see page 23
[2] continuously variable (EC) or switchable between 5 stages (AC)
[3] at LPHW 75/65°C, t_{L1} = 20°C
[4] The sound pressure levels were calculated based on an assumed room insulation of 16 dB(A). This corresponds to a distance of 3 m, a room volume of 2000 m³ and a reverberation time of 1.0 s (in accordance with VDI 2081).

UniLine at a glance

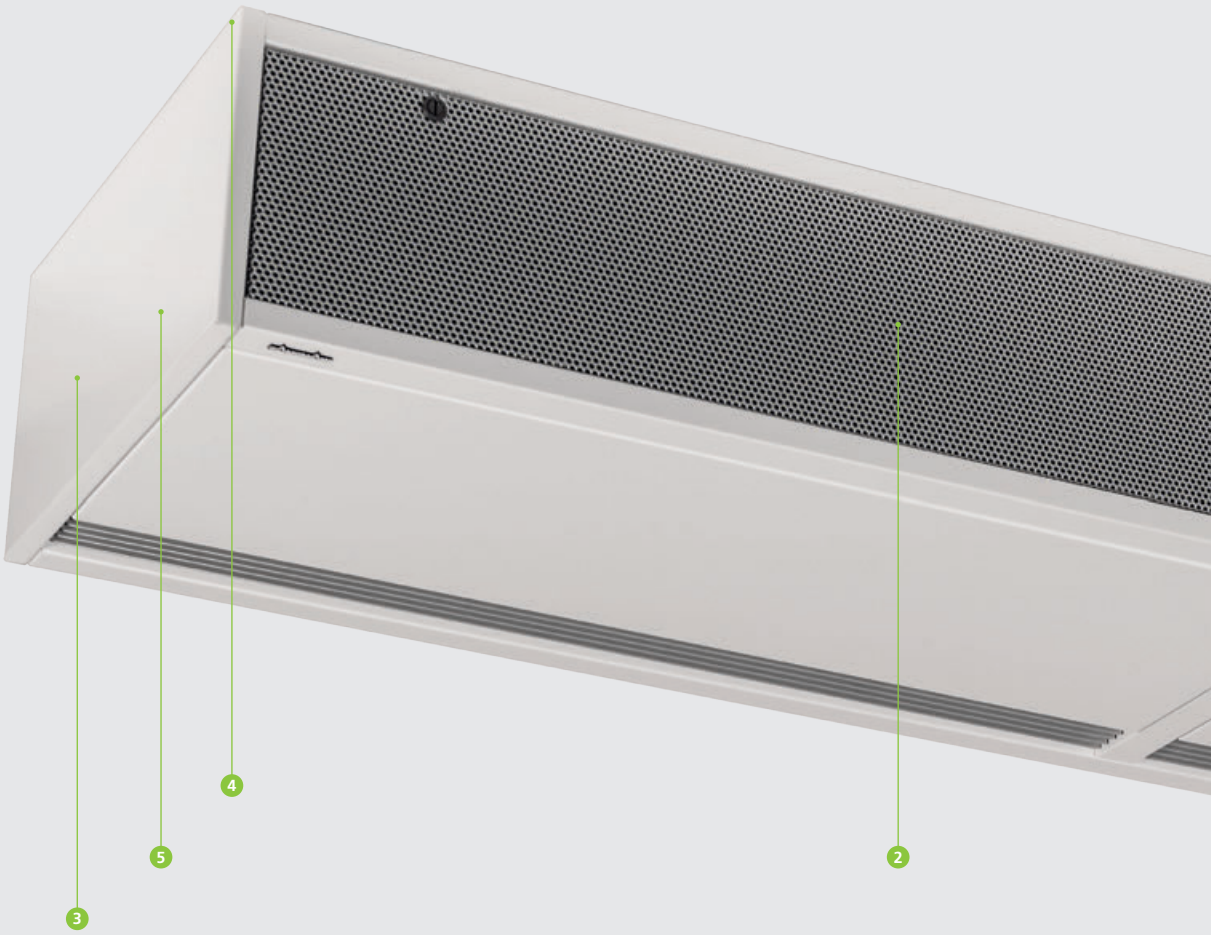

Features

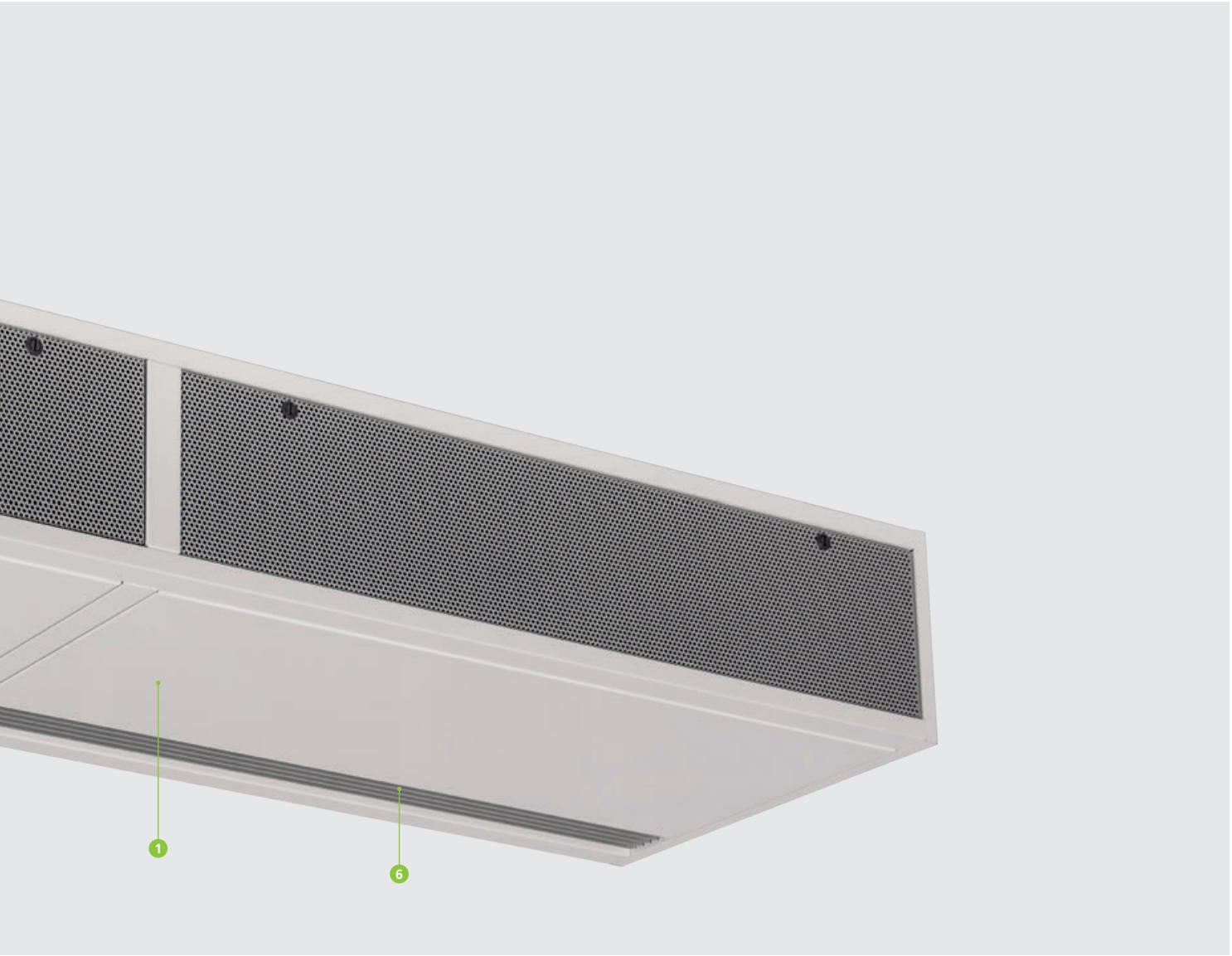

1. **Maintenance access panel:**
   - simple and quick to open
   - fast access for maintenance work
2. **Air intake grille with filter:**
   - opens with minimal effort
   - simple filter replacement without tools
3. **Radial fans:**
   - high-performance radial fans for high air output, wired ready for connection,
   - switchable between 5 stages (AC) or continuously variable (EC)
4. **Anti-twist mechanism for heating connection:**
   - prevents damage to the heat exchanger when fitting the valves
   - optional: valves (accessories)
5. **High-output heat exchanger:**
   - the proven combination of copper/aluminium,
   - optimised for air flow and heat dissipation
6. **Outlet air rectifier:**
   - consisting of an airflow-optimised, adjustable louvre package
   - outlet air rectifier in the air outlet for minimal turbulence and even air discharge, powder-coated in RAL 9006
   - with integral, self-regulating discharge flap for efficient screening at low fan speeds

02 Technical data

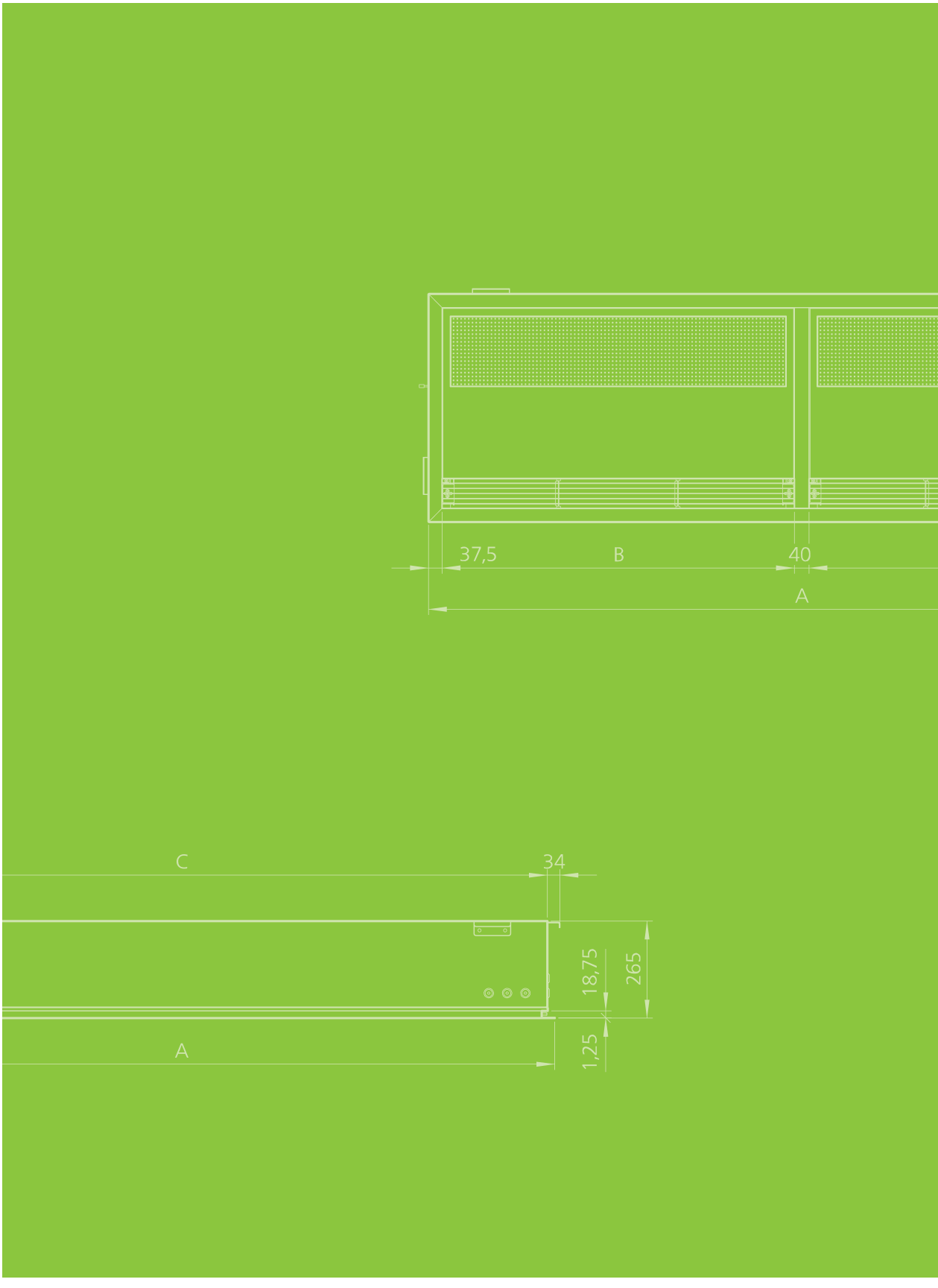

Information on use

Ideally, door air curtains should have a largely continuous air discharge opening which covers the entire width or height of the doorway.

The outlet temperature should be controllable, depending on the heat or cooling requirement in the room. In heating mode, preferably design the outlet temperature to 32°C, although 36°C is recommended. This requirement applies to the room-side air stream with multi-stream systems.

Door air curtains are sized in accordance with VDI 2082, taking into consideration:

- door width and door height
- building position and height
- wind pressure conditions
- number and position of entrances
- type of entrance doors
- size of sales floor
- installation height
- volume of traffic

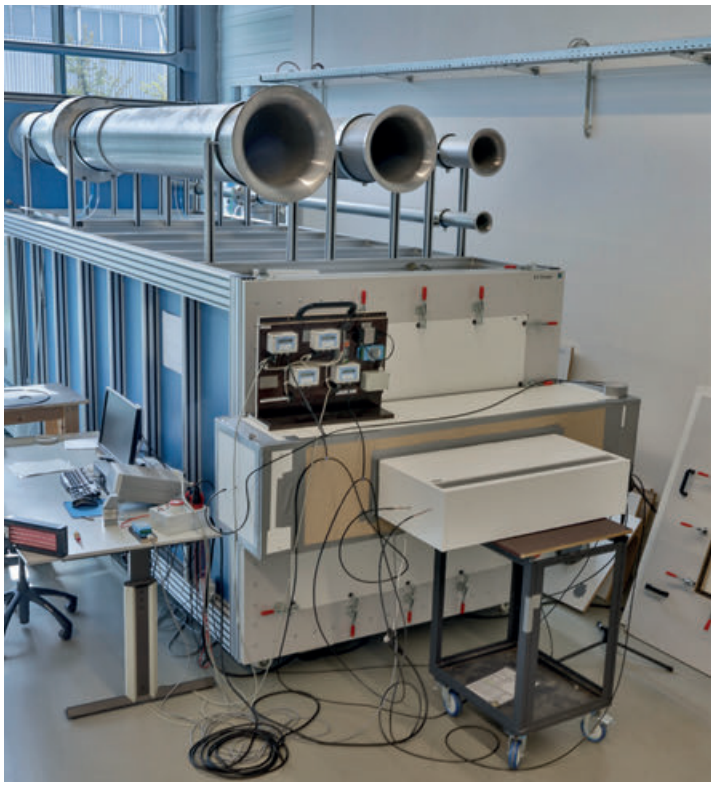

Compliance with the Energy-related Products Directive 2015

In accordance with the ERP Directive ("LOT 11"), the efficiency requirements have increased on fans with an electric drive output of 125 watts to 500 kilowatts. The inlet nozzle used in the unit has to be taken into account along with the fan, in terms of energy. The UniLine range of door air curtains is solely fitted with ErP-compliant fans. The UniLine range of door air curtains and the components used are produced and tested in line with the applicable state of the art.

UniLine AC
Models 10 to 30

Technical drawings (Dimensions in mm)

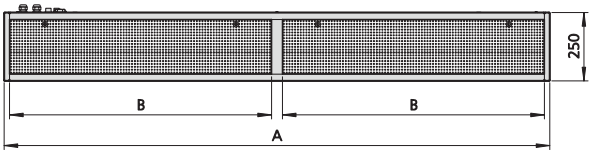

Front view

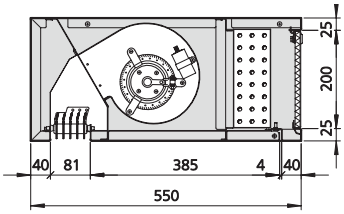

Cross-section

Model	A	B
	[mm]	[mm]
10	1000	960
15	1500	1460
20	2000	960
25	2500	1210
30	3000	1460

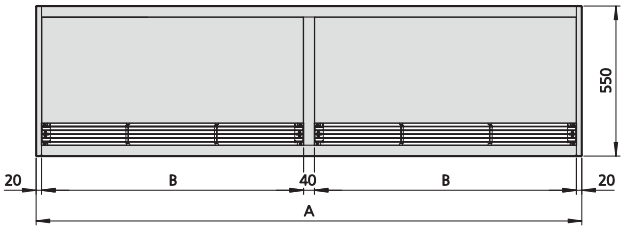

View from below

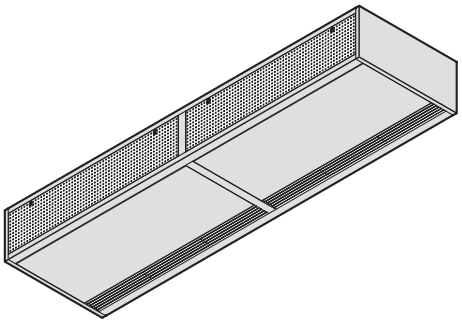

Isometric drawing, view from below

Specifications

Weights

Model	Weight
	[kg]
10	45
15	62
20	79
25	104
30	124

Water content of heat exchanger

Model	Water content
	[l]
10	1.0
15	1.8
20	2.6
25	3.5
30	4.5

Use our online calculation programs to quickly calculate heat outputs and flow rates at the click of a button!

- **kampmann.co.uk/uniline/calculation**

Water resistance diagram

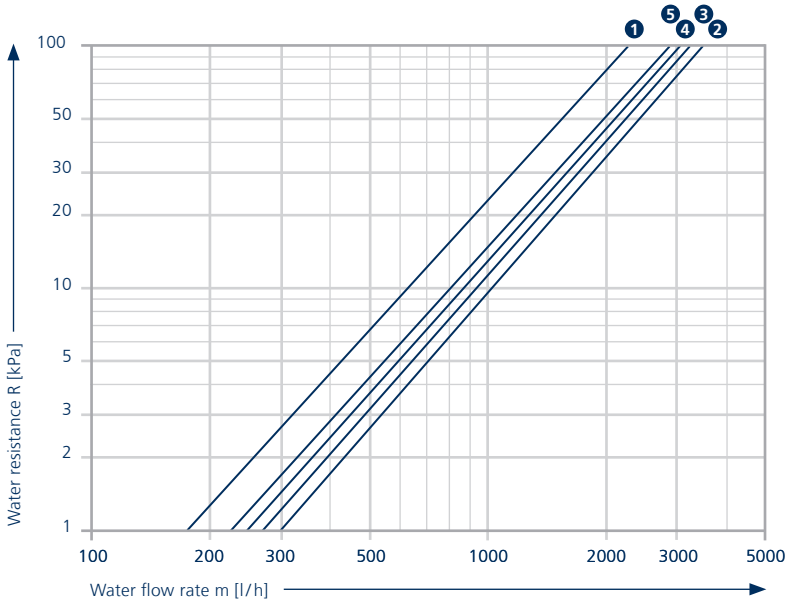

1. Model 10
2. Model 15
3. Model 20
4. Model 25
5. Model 30

Model outputs: AC

Model	Max. discharge height[1]	Max. door width	Operating level	Air volume	Heat outputs[2]				Power consumption	Current consumption	Sound pressure level[3]	Sound power level
					at LPHW 75/65 °C		at LPHW 82/71 °C					
	[m]	[m]		V [m³/h]	Q_H [kW]	t_{L2} [°C]	Q_H [kW]	t_{L2} [°C]	P [W]	I [A]	L_{pA} [dB(A)]	L_{WA} [dB(A)]
10	2.3 - 3.0	1.0	5	1390	10.2	41.6	11.7	44.8	382	1.82	59	75
			4	1220	9.6	43.2	11.1	46.7	299	1.43	56	72
			3	1050	9.0	45.1	10.3	48.9	228	1.09	52	68
			2	920	8.4	46.8	9.6	50.8	193	0.92	49	65
			1	600	6.7	52.6	7.7	57.5	113	0.54	38	54
15	2.3 - 3.0	2.0	5	2130	17.4	44.0	20.0	47.6	565	2.67	60	76
			4	1880	15.9	44.9	18.3	48.7	438	2.07	57	73
			3	1610	14.3	46.1	16.5	50.1	330	1.56	53	69
			2	1400	13.0	47.2	14.9	51.3	275	1.30	50	66
			1	930	9.6	50.5	11.1	59.3	156	0.74	39	55
20	2.3 - 3.0	2.0	5	2820	24.2	45.2	27.8	49.0	757	3.70	61	77
			4	2480	22.1	46.2	25.4	50.2	586	2.80	58	74
			3	2140	19.9	47.4	22.9	51.5	450	2.20	55	71
			2	1850	18.0	48.6	20.7	52.8	368	1.80	51	67
			1	1210	13.1	51.9	15.1	56.7	205	1.00	41	57
25	2.3 - 3.0	2.5	5	4000	33.9	44.9	38.9	48.6	940	4.75	62	78
			4	3450	30.6	46.0	35.1	50.0	800	4.04	58	74
			3	2980	27.6	47.2	31.7	51.3	604	3.05	54	70
			2	2620	25.1	48.2	28.9	52.5	509	2.58	51	67
			1	1660	18.0	51.8	20.7	56.6	287	1.45	42	58
30	2.3 - 3.0	3.0	5	5330	44.2	44.4	50.8	48.0	1604	7.81	64	80
			4	4600	40.1	45.6	46.1	49.5	1260	6.05	60	76
			3	3970	36.4	47.0	41.8	51.0	958	4.62	56	72
			2	3490	33.3	48.1	38.3	52.3	915	3.86	53	69
			1	2210	24.1	52.1	27.7	56.9	479	2.27	44	60

V [m³/h] = air volume, free-blowing; Q_H [kW] = heat output; t_{L1} [°C] = air inlet temperature; t_{L2} [°C] = air outlet temperature

1) at low to medium pressure, requirements and conditions, see page 23
2) at air intake temperature t_{L1} = 20 °C
3) The sound pressure levels were calculated based on an assumed room insulation of 16 dB(A). This corresponds to a distance of 3 m, a room volume of 2000 m³ and a reverberation time of 1.0 s (in accordance with VDI 2081).

UniLine EC
Models 10 to 30

Technical drawings (Dimensions in mm)

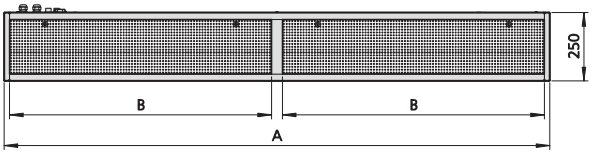

Front view

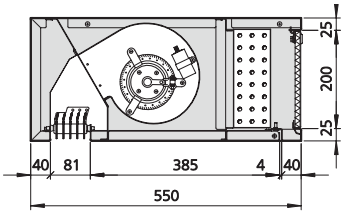

Cross-section

Model	A	B
	[mm]	[mm]
10	1000	960
15	1500	1460
20	2000	960
25	2500	1210
30	3000	1460

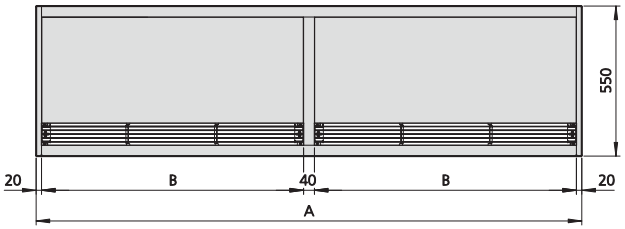

View from below

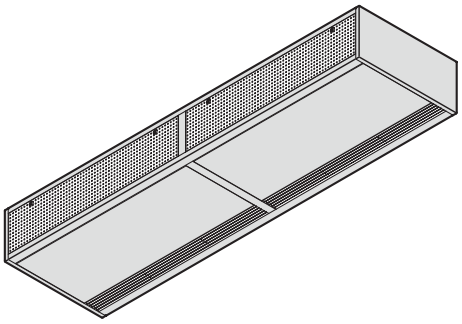

Isometric drawing, view from below

Specifications

Weights

Model	Weight
	[kg]
10	39
15	56
20	70
25	88
30	104

Water content of heat exchanger

Model	Water content
	[l]
10	1.0
15	1.8
20	2.6
25	3.5
30	4.5

Use our online calculation programs to quickly calculate heat outputs and flow rates at the click of a button!

- **kampmann.co.uk/uniline/calculation**

Water resistance diagram

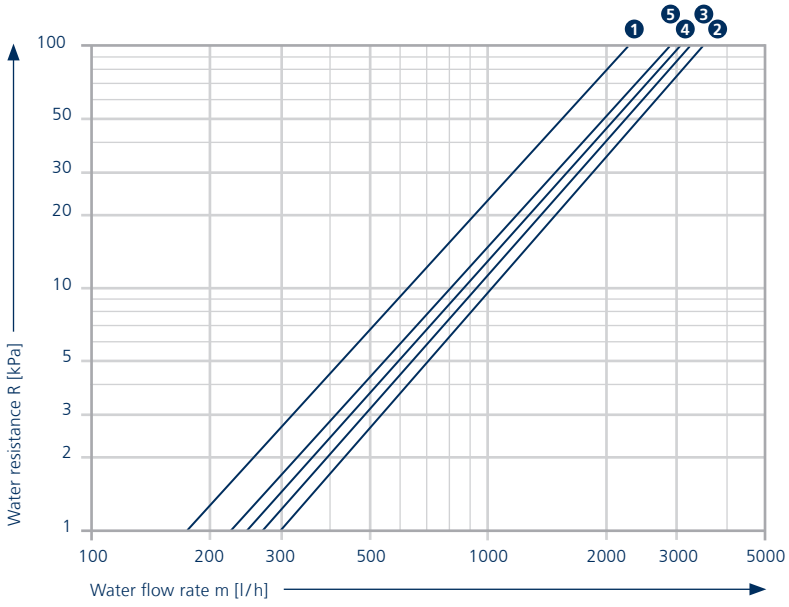

1. Model 10
2. Model 15
3. Model 20
4. Model 25
5. Model 30

Model outputs: EC

Model	Max. discharge height[1]	Max. door width	Operating level	Air volume	Heat outputs[2]				Power consumption	Current consumption	Sound pressure level[3]	Sound power level
					at LPHW 75/65 °C		at LPHW 82/71 °C					
	[m]	[m]		V [m³/h]	Q_H [kW]	t_{L2} [°C]	Q_H [kW]	t_{L2} [°C]	P [W]	I [A]	L_{pA} [dB(A)]	L_{WA} [dB(A)]
10	2.3 - 3.0	1.0	10	1410	10.3	41.5	11.8	44.7	148	1.04	56	72
			8	1170	9.1	43.0	10.5	46.3	92	0.64	52	68
			6	930	7.9	44.9	9.1	48.7	49	0.34	48	64
			4	620	6.0	48.3	6.9	52.7	20	0.15	43	59
			2	290	3.4	54.8	3.9	59.7	6	0.07	27	43
15	2.3 - 3.0	2.0	10	2540	19.5	42.6	22.4	46.0	254	1.73	57	73
			8	2110	17.3	44.1	19.9	47.7	156	1.07	53	69
			6	1570	14.2	46.6	16.3	50.6	79	0.57	49	65
			4	1010	10.5	50.6	12.1	55.2	33	0.27	42	58
			2	410	5.3	58.2	6.1	63.7	12	0.13	31	47
20	2.3 - 3.0	2.0	10	2820	24.1	45.1	27.7	48.9	296	2.07	59	75
			8	2350	21.3	46.7	24.5	50.7	184	1.28	55	71
			6	1850	18.1	48.8	20.8	53.1	98	0.69	51	67
			4	1250	13.9	52.7	16.0	57.6	40	0.30	46	62
			2	580	7.6	58.7	8.7	64.3	12	0.13	30	46
25	2.3 - 3.0	2.5	10	3980	33.7	44.9	38.8	48.6	409	2.82	60	76
			8	3310	29.8	46.5	34.3	50.5	252	1.74	56	72
			6	2520	24.8	48.9	28.5	53.3	130	0.93	51	67
			4	1650	18.3	52.6	21.0	57.5	54	0.42	45	61
			2	710	9.6	59.7	11.0	65.7	18	0.19	33	49
30	2.3 - 3.0	3.0	10	5080	42.8	44.8	49.2	48.5	508	3.46	60	76
			8	4220	37.9	46.4	43.6	50.4	312	2.14	56	72
			6	3130	30.9	49.0	35.5	53.4	158	1.14	52	68
			4	2010	22.8	53.4	26.2	58.4	66	0.53	46	62
			2	810	11.1	60.3	12.8	66.4	24	0.27	34	50

V [m³/h] = air volume, free-blowing; Q_H [kW] = heat output; t_{L1} [°C] = air inlet temperature; t_{L2} [°C] = air outlet temperature

1) at low to medium pressure, requirements and conditions, see page 23
2) at air intake temperature t_{L1} = 20 °C
3) The sound pressure levels were calculated based on an assumed room insulation of 16 dB(A). This corresponds to a distance of 3 m, a room volume of 2000 m³ and a reverberation time of 1.0 s (in accordance with VDI 2081).

Cassette UniLine AC

Models 10 to 25

Technical drawings (Dimensions in mm)

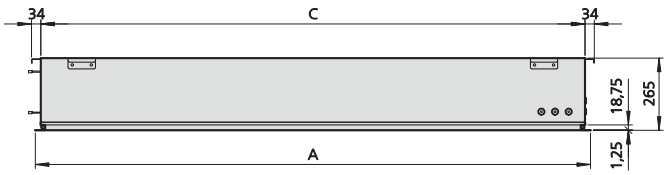

Front view

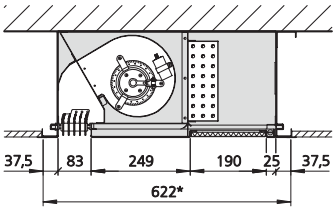

Cross-section

Model	A	B
	[mm]	[mm]
10	1035	960
15	1535	1460
20	2035	960
25	2535	1210

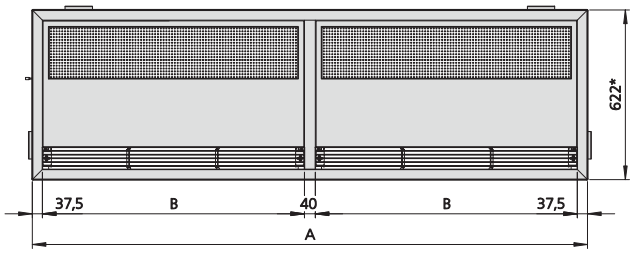

View from below

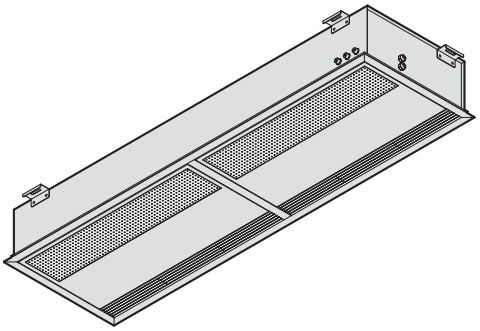

Isometric drawing, view from below

Specifications

Weights

Model	Weight
	[kg]
10	49
15	68
20	87
25	115

Water content of heat exchanger

Model	Water content
	[l]
10	1.0
15	1.8
20	2.6
25	3.5

Use our online calculation programs to quickly calculate heat outputs and flow rates at the click of a button!

- **kampmann.co.uk/uniline/calculation**

Water resistance diagram

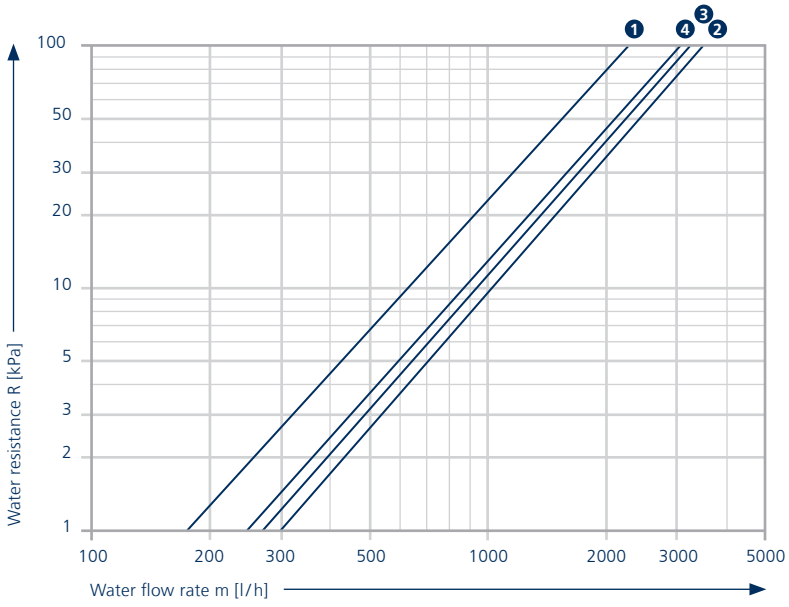

1 Model 10
2 Model 15
3 Model 20
4 Model 25

Model outputs: AC

Model	Max. discharge height[1]	Max. door width	Operating level	Air volume	Heat outputs[2]				Power consumption	Current consumption	Sound pressure level[3]	Sound power level
					at LPHW 75/65 °C		at LPHW 82/71 °C					
	[m]	[m]		V [m³/h]	Q_H [kW]	t_{L2} [°C]	Q_H [kW]	t_{L2} [°C]	P [W]	I [A]	L_{pA} [dB(A)]	L_{WA} [dB(A)]
10	2.3 – 3.0	1.0	5	1390	10.2	41.6	11.7	44.8	382	1.82	59	75
			4	1220	9.6	43.2	11.1	46.7	299	1.43	56	72
			3	1050	9.0	45.1	10.3	48.9	228	1.09	52	68
			2	920	8.4	46.8	9.6	50.8	193	0.92	49	65
			1	600	6.7	52.6	7.7	57.5	113	0.54	38	54
15	2.3 - 3.0	2.0	5	2130	17.4	44.0	20.0	47.6	565	2.67	60	76
			4	1880	15.9	44.9	18.3	48.7	438	2.07	57	73
			3	1610	14.3	46.1	16.5	50.1	330	1.56	53	69
			2	1400	13.0	47.2	14.9	51.3	275	1.30	50	66
			1	930	9.6	50.5	11.1	59.3	156	0.74	39	55
20	2.3 - 3.0	2.0	5	2820	24.2	45.2	27.8	49.0	757	3.70	61	77
			4	2480	22.1	46.2	25.4	50.2	586	2.80	58	74
			3	2140	19.9	47.4	22.9	51.5	450	2.20	55	71
			2	1850	18.0	48.6	20.7	52.8	368	1.80	51	67
			1	1210	13.1	51.9	15.1	56.7	205	1.00	41	57
25	2.3 - 3.0	2.5	5	4000	33.9	44.9	38.9	48.6	940	4.75	62	78
			4	3450	30.6	46.0	35.1	50.0	800	4.04	58	74
			3	2980	27.6	47.2	31.7	51.3	604	3.05	54	70
			2	2620	25.1	48.2	28.9	52.5	509	2.58	51	67
			1	1660	18.0	51.8	20.7	56.6	287	1.45	42	58

V [m³/h] = air volume, free-blowing; Q_H [kW] = heat output; t_{L1} [°C] = air inlet temperature; t_{L2} [°C] = air outlet temperature

[1] at low to medium pressure, requirements and conditions, see page 23

[2] at air intake temperature $t_{L1} = 20\,°C$

[3] The sound pressure levels were calculated based on an assumed room insulation of 16 dB(A). This corresponds to a distance of 3 m, a room volume of 2000 m³ and a reverberation time of 1.0 s (in accordance with VDI 2081).

Cassette UniLine EC

Models 10 to 25

Technical drawings (Dimensions in mm)

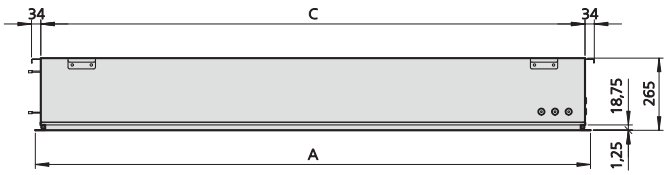

Front view

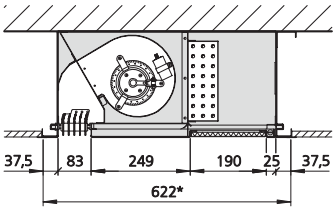

Cross-section

Model	A	B
	[mm]	[mm]
10	1035	960
15	1535	1460
20	2035	960
25	2535	1210

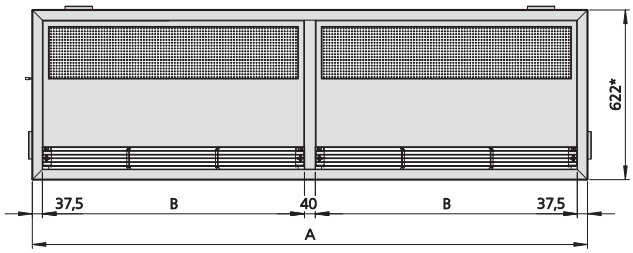

View from below

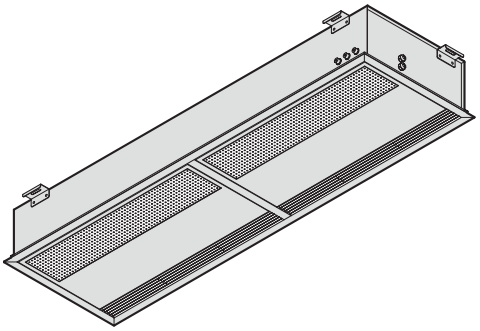

Isometric drawing, view from below

Specifications

Weights

Model	Weight
	[kg]
10	43
15	62
20	78
25	99

Water content of heat exchanger

Model	Water content
	[l]
10	1.0
15	1.8
20	2.6
25	3.5

Use our online calculation programs to quickly calculate heat outputs and flow rates at the click of a button!

- **kampmann.co.uk/uniline/calculation**

Water resistance diagram

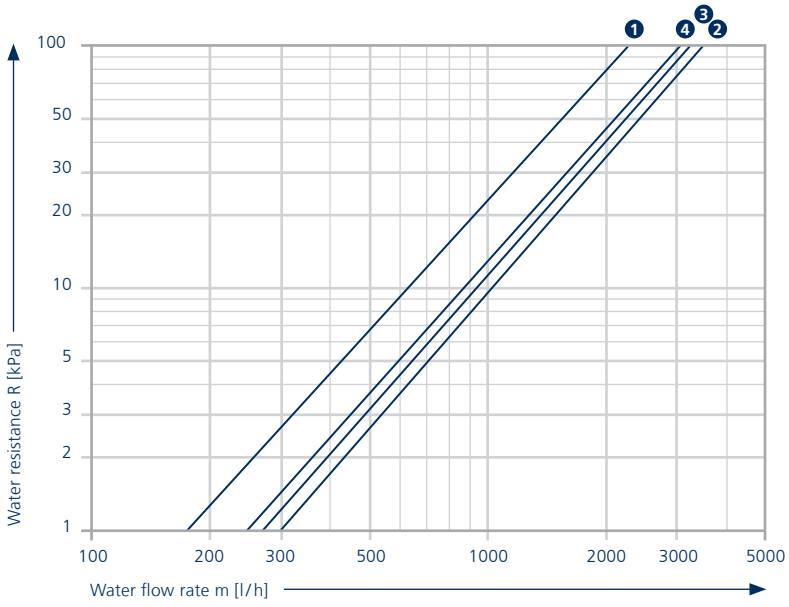

1 Model 10
2 Model 15
3 Model 20
4 Model 25

Model outputs: EC

Model	Max. discharge height[1]	Max. door width	Operating level	Air volume	Heat outputs[2]				Power consumption	Current consumption	Sound pressure level[3]	Sound power level
					at LPHW 75/65 °C		at LPHW 82/71 °C					
	[m]	[m]		V [m³/h]	Q_H [kW]	t_{L2} [°C]	Q_H [kW]	t_{L2} [°C]	P [W]	I [A]	L_{pA} [dB(A)]	L_{WA} [dB(A)]
10	2.3 - 3.0	1.0	10	1410	10.3	41.5	11.8	44.7	148	1.04	56	72
			8	1170	9.1	43.0	10.5	46.3	92	0.64	52	68
			6	930	7.9	44.9	9.1	48.7	49	0.34	48	64
			4	620	6.0	48.3	6.9	52.7	20	0.15	43	59
			2	290	3.4	54.8	3.9	59.7	6	0.07	27	43
15	2.3 - 3.0	2.0	10	2540	19.5	42.6	22.4	46.0	254	1.73	57	73
			8	2110	17.3	44.1	19.9	47.7	156	1.07	53	69
			6	1570	14.2	46.6	16.3	50.6	79	0.57	49	65
			4	1010	10.5	50.6	12.1	55.2	33	0.27	42	58
			2	410	5.3	58.2	6.1	63.7	12	0.13	31	47
20	2.3 - 3.0	2.0	10	2820	24.1	45.1	27.7	48.9	296	2.07	59	75
			8	2350	21.3	46.7	24.5	50.7	184	1.28	55	71
			6	1850	18.1	48.8	20.8	53.1	98	0.69	51	67
			4	1250	13.9	52.7	16.0	57.6	40	0.30	46	62
			2	580	7.6	58.7	8.7	64.3	12	0.13	30	46
25	2.3 - 3.0	2.5	10	3980	33.7	44.9	38.8	48.6	409	2.82	60	76
			8	3310	29.8	46.5	34.3	50.5	252	1.74	56	72
			6	2520	24.8	48.9	28.5	53.3	130	0.93	51	67
			4	1650	18.3	52.6	21.0	57.5	54	0.42	45	61
			2	710	9.6	59.7	11.0	65.7	18	0.19	33	49

V [m³/h] = air volume, free-blowing; Q_H [kW] = heat output; t_{L1} [°C] = air inlet temperature; t_{L2} [°C] = air outlet temperature

[1] at low to medium pressure, requirements and conditions, see page 23

[2] at air intake temperature t_{L1} = 20 °C

[3] The sound pressure levels were calculated based on an assumed room insulation of 16 dB(A). This corresponds to a distance of 3 m, a room volume of 2000 m³ and a reverberation time of 1.0 s (in accordance with VDI 2081).

03 Design information

Layout

When positioned over the door, the equipment needs to be installed in such a way that the air outlet grille is positioned as closely as possible to the door opening, preferably directly adjacent to the door.

With horizontal and vertical gaps of more than 500 mm between the door opening and outlet grille, select the next model length up or provide for side panelling similar to a corridor.

Operating limits

Extremely poor operating conditions, such as

- strong negative pressure in the rooms, e.g. produced by mechanical ventilation without the supply of outside air,
- extremely adverse weathering conditions with high wind speeds in an unprotected position,
- several open openings to the outside, especially if they are positioned opposite each other,

can impair the effective screening effect of the door air curtains. Additional measures, may need to be put in place, to compensate for the pressure in the room. Note the following when planning doorways and passages, so that doors may need to be closed during business times.

Provide for units with higher air outputs and heat outputs should doors need to remain open in large department stores, even in the event of unfavourable or extreme weather.

They have to be in a position to heat up the large volumes of cold air, which can penetrate under certain circumstances.

Low temperature operation

Modern low temperature and condensing boilers only achieve the highest levels of efficiency with low flow temperatures. Kampmann UniLine door air curtains have high-output copper / aluminium heat exchangers and are suitable for low temperature operation at a flow temperature of approx. 50°C. Thanks to their extremely low water content and fan operation with high air volumes, they react extremely quickly after long cooling down periods.

Sound pressure level

The aerodynamic construction of UniLine units only produces a very low noise level, in spite of the high outlet air speeds. Nevertheless, it is important to note that the sound levels may be troubling at high fan speeds. Sound pressure levels are listed in the technical data tables.

The sound pressure levels were calculated with an assumed room insulation of 16 dB(A). This corresponds to a distance of 3 m, a room volume of 2000 m³ and a reverberation time of 1.0 s (in accordance with VDI 2081). As the actual sound pressure level is seriously dependent on the acoustic properties of the space, the stated figures can deviate in practice. Increased sound levels of approx. 3–6 dB (A) can occur under acoustically unfavourable conditions, such as “acoustically hard” ceilings, closed doors and poor absorption surfaces. If two models of the same door air curtain are arranged adjacent to each other, the increased sound pressure level will be approx. 2 - 3 dB (A).

Max. electrical rating of UniLine

Motor design	Model	Voltage [V] / Frequency [Hz]	Power consumption [kW]	Current consumption [A]	Speed [min^{-1}]
AC	Model 10	230 / 50	0.4	1.8	1600
	Model 15	230 / 50	0.6	2.7	1600
	Model 20	230 / 50	0.8	3.6	1600
	Model 25	230 / 50	1.2	5.4	1600
	Model 30	230 / 50	1.6	7.2	1600
EC	Model 10	230 / 50/60	0.5	3.6	1400
	Model 15	230 / 50/60	0.7	5.4	1400
	Model 20	230 / 50/60	1.0	7.2	1400
	Model 25	230 / 50/60	1.5	10.8	1400
	Model 30	230 / 50/60	1.9	14.4	1400

The power and current consumption of the transformer (AC), the control system and actuators (optional) is not taken into account.

Unit selection and combination options

Selection of the unit configuration based on maximum discharge height

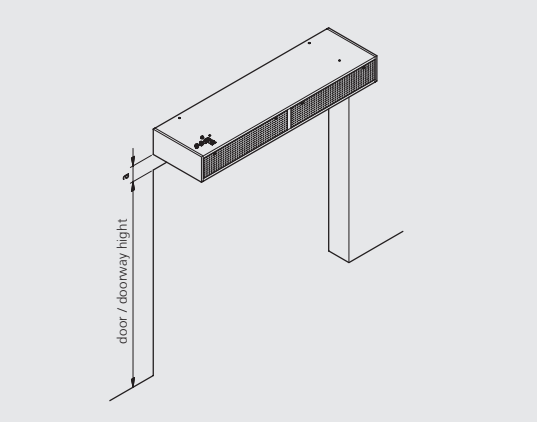

1. Based on discharge height:
- max. discharge height H_{max} = doorway height + a

Also consider:
- wind pressure conditions
- impact of thoroughfares, porches, position of the building
- space occupied by people
- pressure conditions caused by mechanical ventilation etc.

Max. discharge height H_{max} [1]	Door air curtain
[m]	
2.3–3.0	UniLine
2.3–3.0	Cassette UniLine

Selection of the unit configuration based on door / doorway width

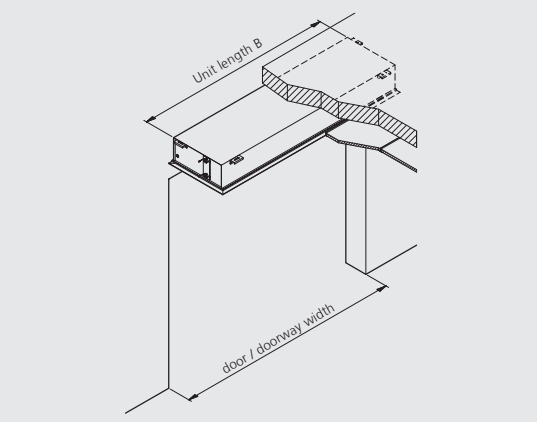

2. Based on door / doorway width:
The required model of door air curtain is selected on the basis of the door width:
- door/doorway width = unit length B

The unit lengths are based on common door opening dimensions. Other unit lengths can be obtained by combining units of the same or different model, thanks to the hydraulic and electrical connections at the top (see table below).

Door/ doorway width	Models of door air curtain	
	UniLine	Cassette UniLine
[m]		
1.0	Model 10	Model 10
1.5	Model 15	Model 15
2.0	Model 20	Model 20
2.5	Model 25	Model 25
3.0	Model 30	–

[1] at low to medium pressure, requirements and conditions

To assist with selection

Assessment criteria	Pressure / Requirements / Conditions	Points*
1. Wind pressure conditions	0 1 2 3 4 5 6 weak air flow from densely populated position — medium air flow — strong air flow, close to the sea, on a slope	
2. Passage / Porch	0 1 2 3 4 available, closed — open — not available	
3. Position of building	0 1 2 3 4 5 6 normal, protected — open buildings — free-standing, unprotected	
4. Area constantly occupied by people	0 1 2 Zone I — Zone II — Zone III 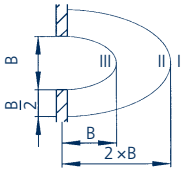 B = door width	
5. Pressure conditions caused by mechanical ventilation	0 1 2 3 4 overpressure — pressure equalisation — slight negative pressure	
6. Other thoroughfares / doors	0 1 2 3 4 none — at the side of the door opening — opposite the door opening	
7. Ceiling height	0 1 2 3 4 up to 2.5 m — up to 3.5 m — more than 4.5 m and/or with staircase	
8. Floor area	0 1 2 3 4 up to 100 m² — 400 m² — above 800 m²	
9. Gap between door opening – air outlet	0 1 2 3 4 5 6 a = 0 — a = 300 mm — a = 600 mm 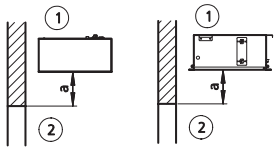 1 = Door air curtain, 2 = Door a = Gap	

Total number of points

* Please enter points.

Selection process

Selection process

Enter points on each scale in line with the conditions on site for the various factors / assessment criteria.

- Intermediate values are also possible.
- In extreme cases, factors outside the point scale can also be taken into consideration. The total of points in the right column of the table gives the total points for determining the maximum discharge heights and discharge widths depending on the switching stage in diagram 1.
- Note the limits of use (see page 23) when the door air curtains are continuously open

In this case, $H_{max.}$ stands for maximum discharge height for UniLine door air curtains.

Selection example

Specification: Door air curtain for showroom,
Doorway: Height 2.20 m, width 2.00 m

weak air flow	(1 point)
porch or passage fitted	(0 points)
normal, protected location	(0 points)
sales personnel in Zone II	(1 point)
minimal positive pressure in the room	(1 point)
side thoroughfare fitted	(2 points)
room height 3.00 m	(1 point)
room area 200 m^2	(1 point)
distance from door opening – air outlet 100 mm	(1 point)
Total points:	8 points

Selection

- door air curtain model 20, thus unit length = door width
- assessment as per table: total points = 8
- discharge height = door height + a = 2.2 m + 0.1 m = 2.3 m
- from Diagram 1: at least 8 points, as a minimum: UniLine door air curtain at stage 4 with $H_{max.}$ = 2.30 m

Result: UniLine door air curtain, model 20

Diagram 1

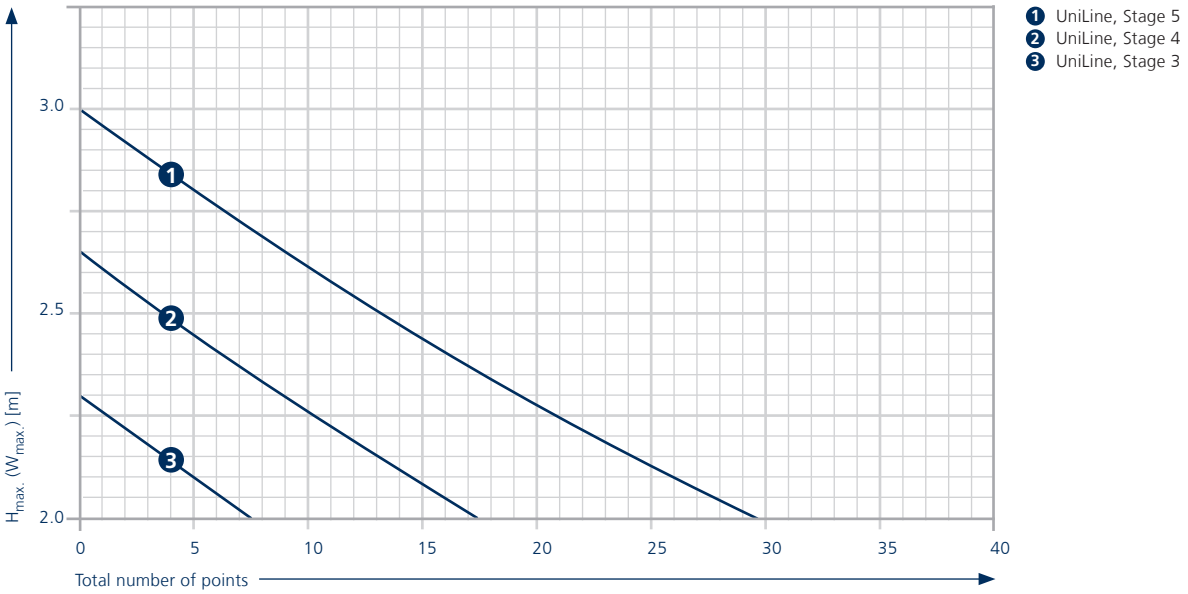

SAM – Silent AutoMotion

UniLine door air curtains are equipped ex works with SAM-function. In the occupied working area, this creates higher air outlet speeds with lower air volumes by reducing the outlet cross-section. The flap fully opens at maximum air volume.

Depending on the heat requirement on site, open entrances can now be efficiently screened with minimal power consumption and low sound power levels.

In extremely adverse conditions and winds, it may be necessary to raise the air volume to the maximum load range and associated heat output.

Discharge air speed (Example: UniLine EC, model 20)

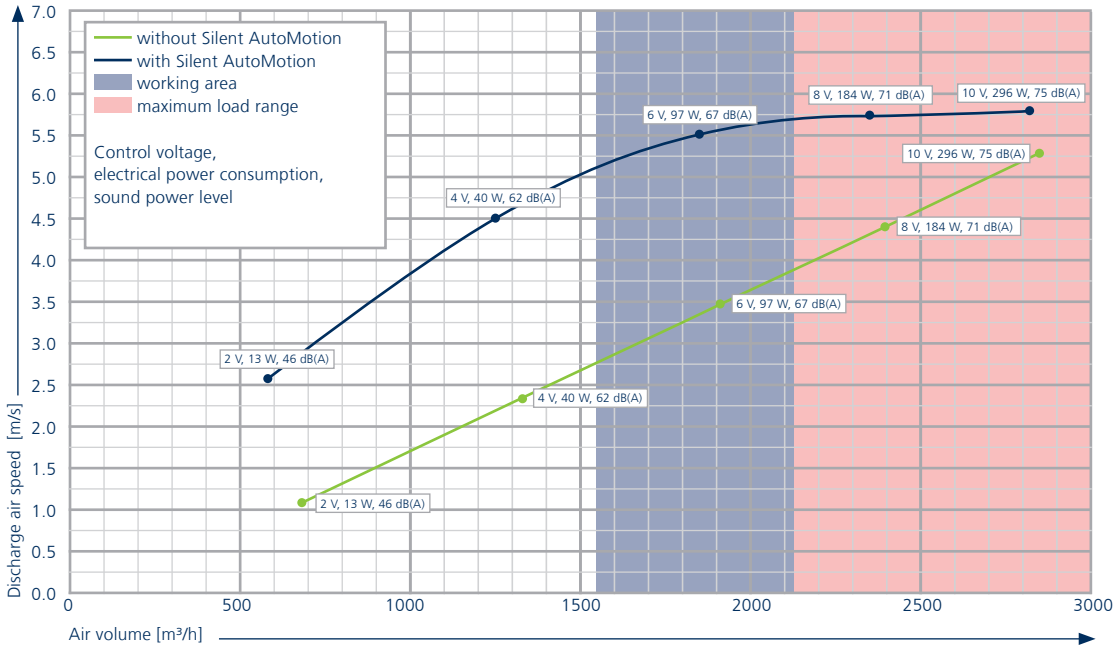

The diagram shows the air outlet speeds above the air volume without Silent AutoMotion (green curve) and with Silent AutoMotion (blue curve), as well as the working range (highlighted in blue) and the maximum load range (highlighted in red).
The maximum air outlet speeds for efficient screening are reached in the working range between 5 and 7 V. Unlike the conventional air outlet without SAM-function at 10 V actuation (296 V electrical power consumption, 75 dB (A)), the air outlet speeds with the new air outlet with SAM-function are achieved at 6 V (97 V electrical power consumption, 67 dB (A) sound power).

This leads to a reduced sound power level of approx. 8 dB(A) and a 67% saving of electrical energy at the same penetration depth providing the local conditions permit the heat output to be reduced. With more exacting requirements (e.g. with extremely adverse conditions), the heat output required can be adapted by increasing the air volume in the maximum load range.

Brackets

Overview of types

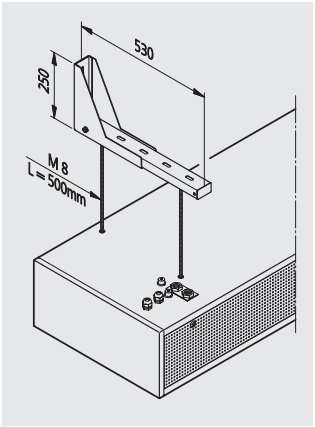

Wall brackets
UniLine model 10 – 30[1)]

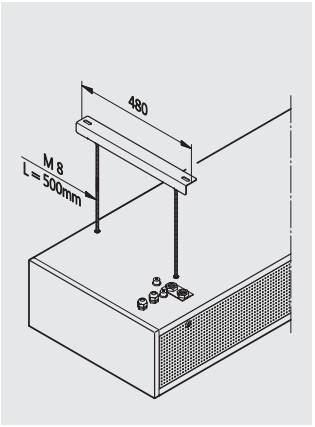

Ceiling brackets
UniLine model 10 – 30[1)]

Slot-in design for wall and ceiling brackets

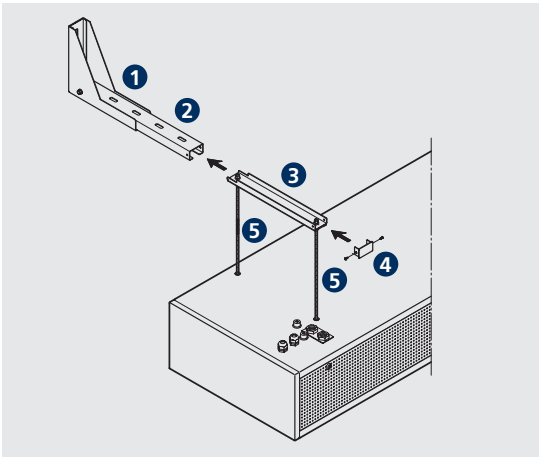

1. Fixing bracket for wall bracket
2. U-shaped rail
3. Slide-in rail
4. Cover
5. Threaded rod

Cassette-UniLine are supplied as standard with 4 fixing brackets (5 with model 25). The unit is then fixed to the ceiling with these brackets using bolts/threaded rods and rawl plugs provided on site. Other articles, such as wall or ceiling brackets are therefore not required (Details see page 30).

Overview

Door air curtains	Model	Wall bracket	Ceiling bracket
UniLine	Model 10–25	Type 500890	Type 500895
	Model 30	Type 500892	Type 500897

[1)] 3 brackets are used with model 30

UniLine:
Fixing points and LPHW connection

UniLine door air curtains are either suspended using wall and ceiling brackets, or a bracket on site. 4 no. M8 rivet nuts (or 6 no. rivet nuts for model 30) are fitted to the unit.

The LPHW and electrical connection is located on the upper side of the unit, on the left-hand side, seen from the air intake.
Dimensions and spacings can be taken from the following drawings and table.

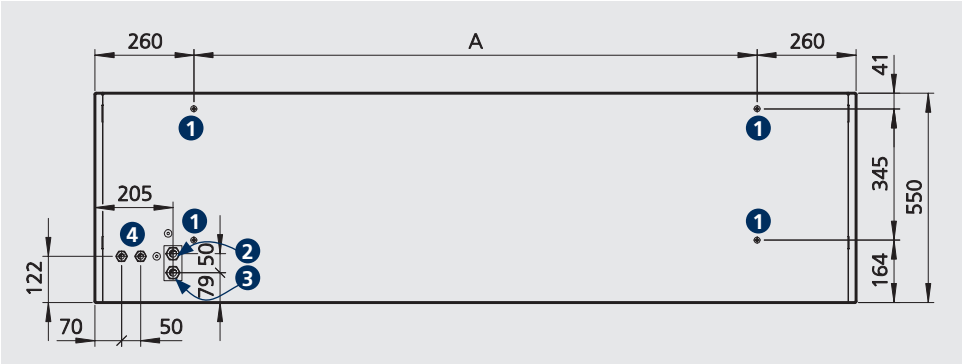

View from above

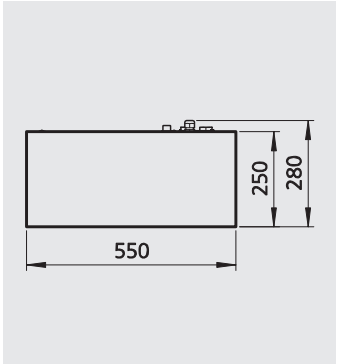

Side view

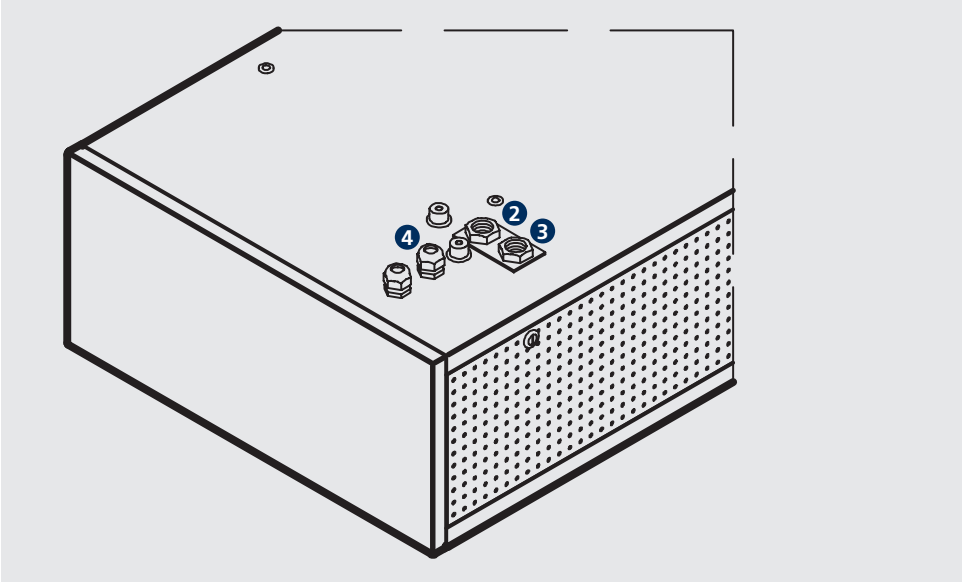

Isometric view, connection area

1. Fixing point
2. Flow 3/4"
3. Return 3/4"
4. Openings for electrical connection and sensor

Spacing of fixing points (dimensions in mm)

Model	10	15	20	25	30
A	480	980	1480	1980	2 x 1240

Cassette UniLine: Fixing points and LPHW connection

Cassette UniLine door air curtains are suspended on the ceiling, either using on-site brackets or bolts. 4 fixing brackets (or 5 fixing brackets for model 25) are enclosed with the unit.

The LPHW connection is located on the side of the unit, on the left-hand side (seen from the air intake), the electrical unit on the right-hand side (seen from the air intake).
Dimensions and spacings can be taken from the following drawings and table.

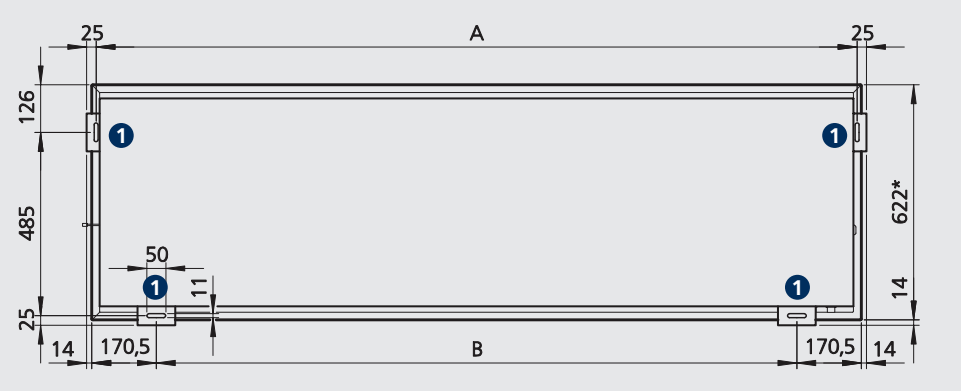

View from above

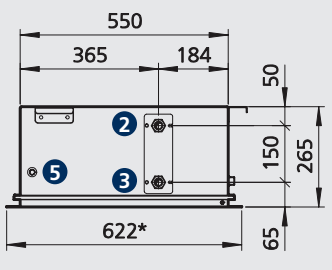

Side view, LPHW connection

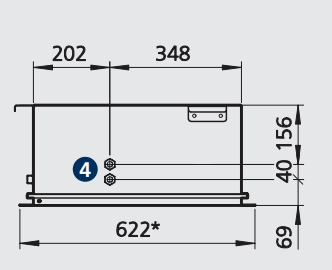

Side view, electrical connection

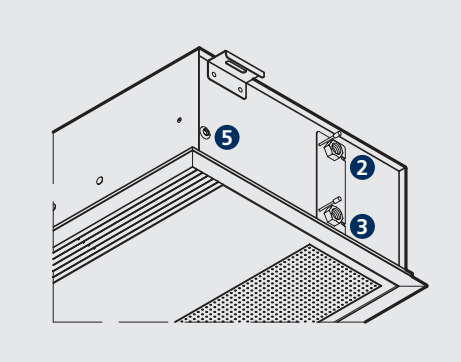

Isometric view, LPHW connection

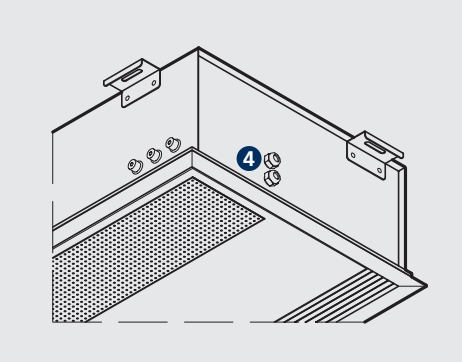

Isometric view, electrical connection

1. Fixing point
2. Flow 3/4" with air vent
3. Return 3/4" with air vent
4. Opening for electrical connection
5. Opening for sensor

Spacing of fixing points (dimensions in mm)

Model	10	15	20	25
A	1012	1512	2012	2512
B	694	1194	1694	2 x 1097

04 Controls

Description of control for UniLine AC with electromechanical control

Product features

Switching the fans

The fan motors integrated in UniLine AC door air curtains can be switched between 5 stages by integral transformers. The summer / winter switches enable pure ventilation operation without the supply of heat in summer with the thermoelectric shut-off valve.

Electrical wiring

Please refer to page 39 for wiring. The electrical rating values are stated in the technical data on pages 14 – 21. The rated values are maximum values under the most unfavourable conditions.
The actual values may be lower depending on the installation location, accessories and level of dirt on the filter.

The connection should comply with the VDE regulations and provisions laid down by the regional electricity providers.

Cascade module

With door air curtains systems operated by a stage switch, up to 10 electromechanical door air curtains can be operated in parallel when using cascade modules (see following table).

Number of cascade modules with parallel operation of door air curtains (maximum 10 units)

	Number of									
UniLine door air curtains	1	2	3	4	5	6	7	8	9	10
Cascade modules with stage switch control	0	1	2	2	3	3	4	4	5	5

Control valves

The discharge temperature is a key factor for the effectiveness of a door air curtain system. Too high outlet air temperatures reduce the penetration depth of the air stream and can have an unpleasant effect. For energy-saving reasons, the discharge temperature of the heating period should not be higher than 40°C, although between 32°C and 36°C is recommended in accordance with VDI 2082. Control to a constant value is possible by the use of an outlet temperature limit valve. The use of a thermoelectric shut-off valve is also possible to avoid the air stream being heated up.

UniLine AC door air curtains, electrical installation

Single operation of UniLine door air curtains

Example:
5-stage switch
surface-mounted,
type 100925

Example: UniLine door air curtains

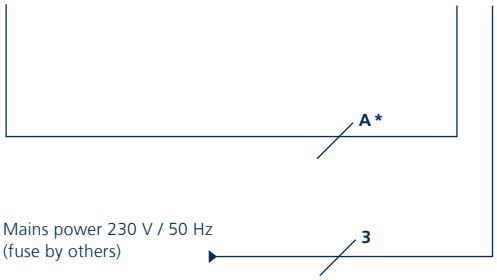

Parallel operation of UniLine door air curtains

Example: UniLine door air curtain

Example: UniLine door air curtain

Example:
5-stage switch
flush-mounted,
type 100926

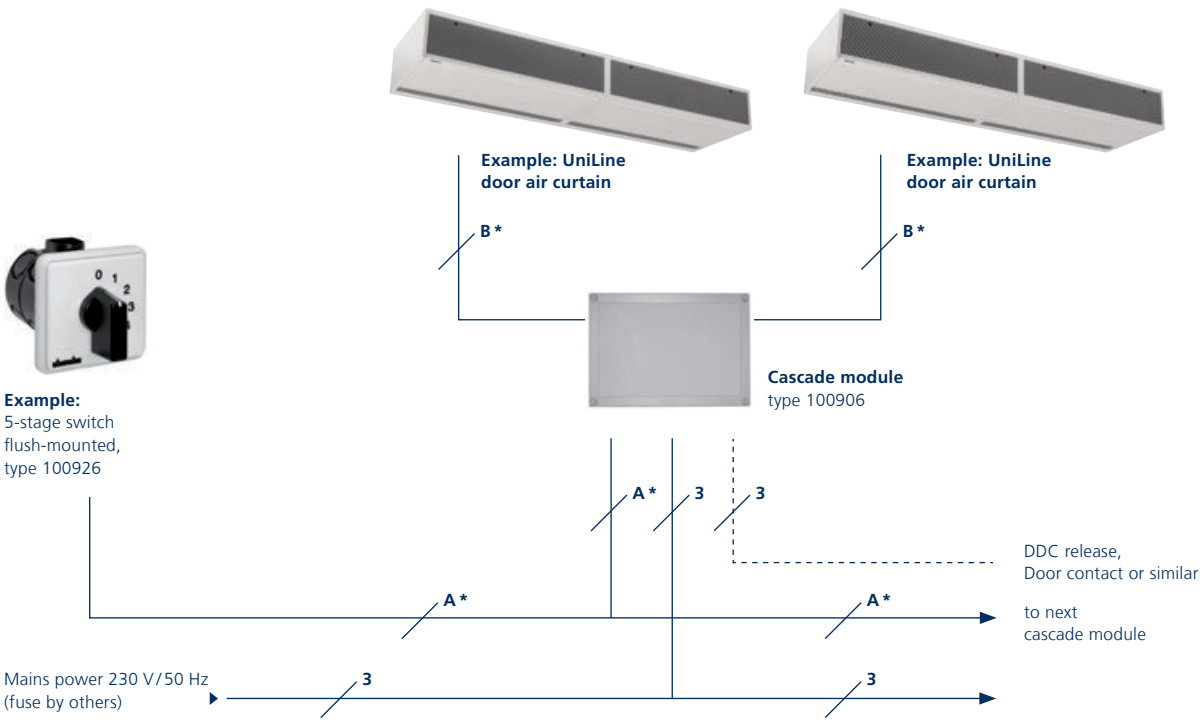

Number of lines including fuse

Lines	5-stage switch, type 100925 / 100926	5-stage summer-winter switch, type 100928 / 100929
A	7	8
B	8 (11)	9 (12)

* Refer to the above table ("Number of lines including fuse") for the number of wires in the labelled cables.
The number of wires including fuse for all other cables is listed in the wiring diagram. The figure in the brackets applies when using a frost protection thermostat (only needed when using in unheated rooms).

Description of control for UniLine AC with P control

Single-circuit control – control version for on-site control

Product features

With control configuration *P, the door air curtain is ideally equipped for integration into on-site automation system.
This configuration includes the automatic switchover of an on-site analogue 0..10 V DC signal in 5-stage ventilation operation with optional actuation by an external switch contact.

Description of controls

BMS interface module for control of a door air curtain via an on-site building management system with the following features:

- two parameterisable digital inputs, for instance, for:
  - unit On / Off
    (fan run-on via on-site timer relay)
  - Summer / Winter changeover
- analogue input 0 – 10 V for fan stage selection
- thermal contact monitoring with automatic shut-down
- fault signal contact potential-free max. 48 V / 1 A
- digital output for heating valve 230 V AC
- frost protection function via optional cable sensor

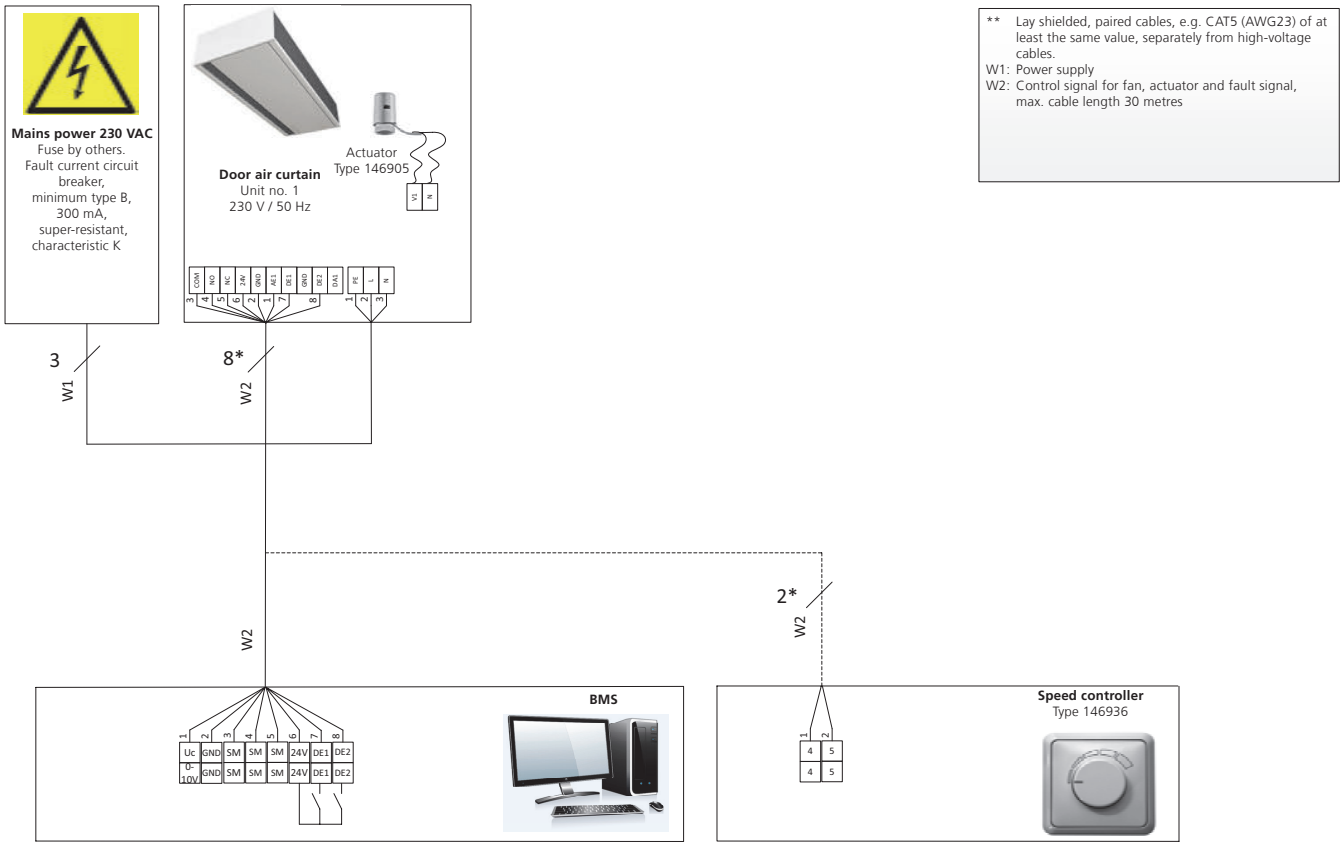

** Lay shielded, paired cables, e.g. CAT5 (AWG23) of at least the same value, separately from high-voltage cables.
W1: Power supply
W2: Control signal for fan, actuator and fault signal, max. cable length 30 metres

** Only use CAT5 (AWG 23 or similar) cable connections.
Important: Wire all BUS connections in a linear manner – star-shaped cabling is not permitted!

Description of control for UniLine EC with electromechanical control

Product features of electromechanical control (*00)

The version with intuitively operated control units and internal fault signal monitoring. The EC fans fitted in UniLine door air curtains can be controlled continuously variably. Any motor fault that occurs is then internally evaluated and switches the fans off.

This configuration can be controlled via the compact controller type 30158 and an external building management system.

Product features of electromechanical control with external fault signal monitoring (*T)

The version with intuitively operated control units and external fault signal monitoring and reporting. The EC fans used in UniLine door air curtains can be controlled continuously variably. Any motor fault that occurs is reported potential-free via a fault signalling PCB and, depending on the control unit connected, can be displayed and called up.

This configuration can be controlled by speed controller type 146936, compact controller type 30158 and an external building management system.

Control valves

The discharge temperature is a key factor for the effectiveness of a door air curtain system. Too high outlet air temperatures reduce the penetration depth of the air stream and can have an unpleasant effect. For energy-saving reasons, the discharge temperature during the heating period should not be higher than 40°C, although between 32°C and 36°C is recommended in accordance with VDI 2082. Control to a constant value is possible by the use of an outlet temperature limit valve. The use of a thermoelectric shut-off valve is also possible to avoid the air stream being heated up.

Operation by a speed controller type 146936

The speed controller offers the simplest method of continuously variable fan speed control.

Operation by a compact controller type 30158

The compact controller offers all key functions in a single control.

- continuously variable 0 to 100% speed control
- operation mode switch: Standby, Winter, Summer
- door contact control input for automatic fan speed increase and actuation of the equipment
- Evaluation and display of a possible motor fault signal
- optional filter monitoring
- optional room temperature control (back-up mode) when absent
- three-coloured LED control for operating modes and signals
- room temperature control: optional use of an internal or external room temperature sensor.
- factory standard setting parameterisable on site.

Operation by an external building management system

In the event of operation by a BMS, this needs a continuous control signal of 0-10 VDC for fan speed and optionally a 230 VAC signal for actuation. The fan speed is proportional to the pending control signal. The thermoelectric actuator can also be operated by a signal. If there are several units, the control signals can be connected in parallel.
If a motor fault is triggered, it can be called up and evaluated by the external BMS.

UniLine EC door air curtains, electromechanical model (*00), electrical installation

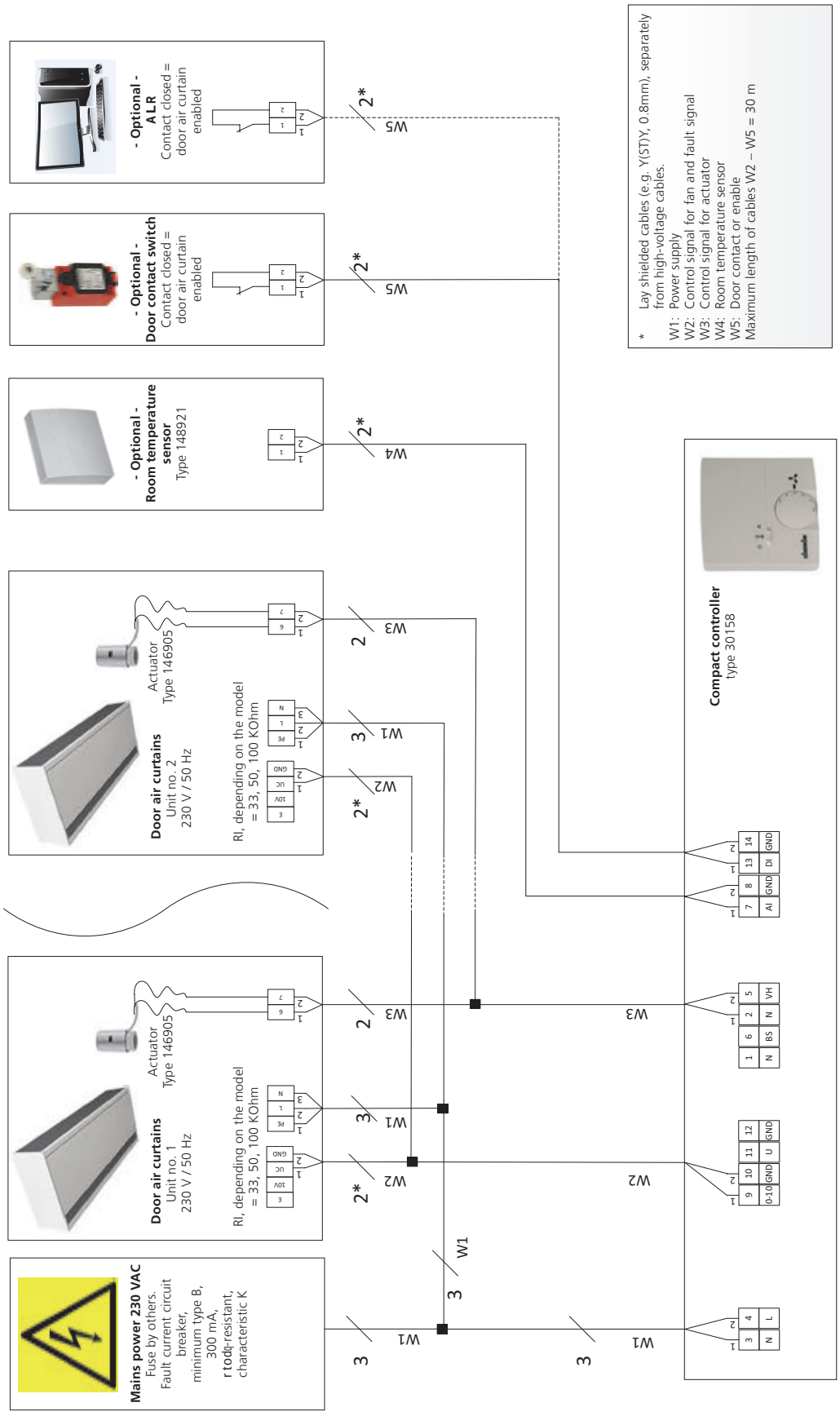

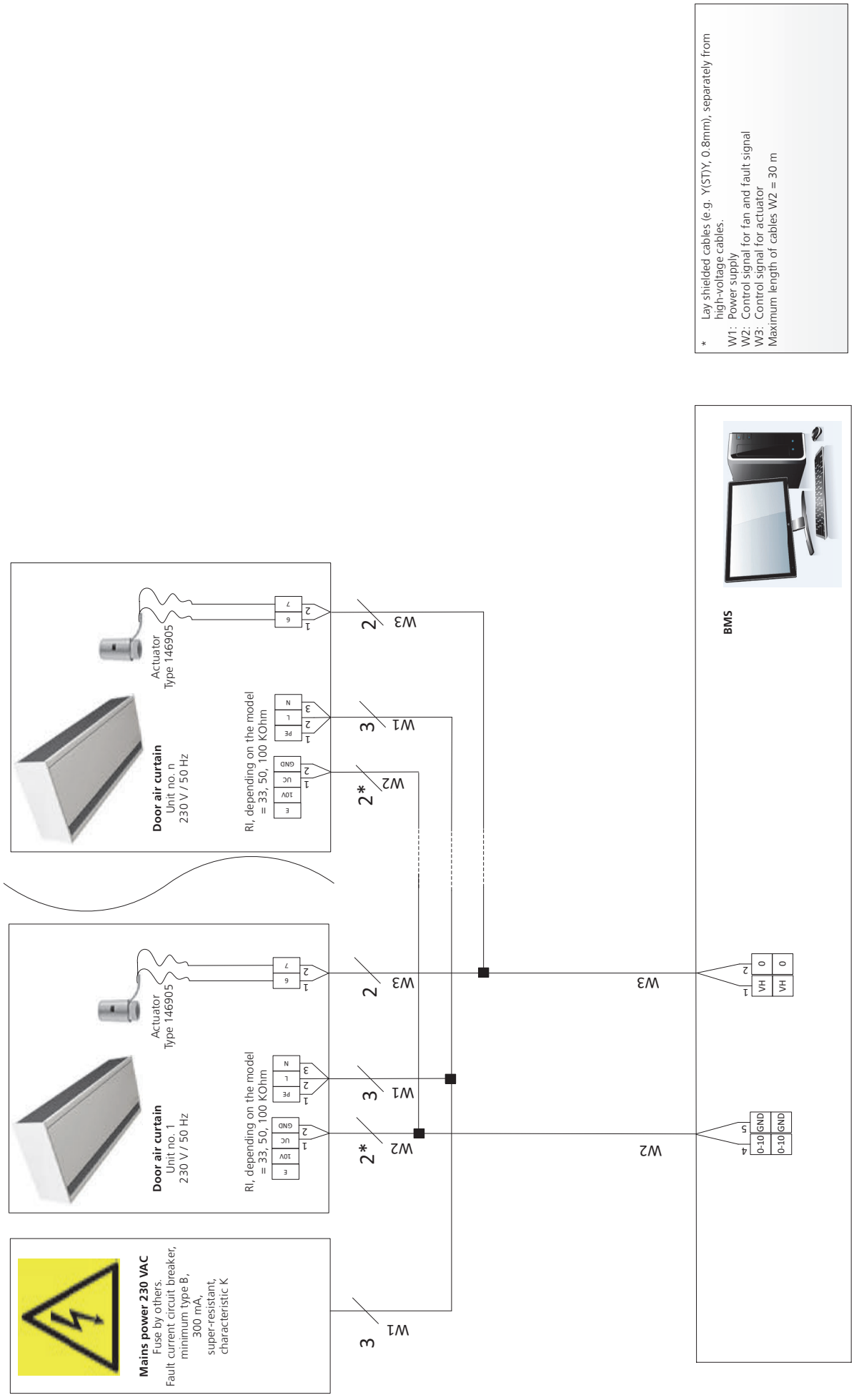
* Lay shielded cables (e.g. Y(ST)Y, 0.8mm), separately from high-voltage cables.
W1: Power supply
W2: Control signal for fan and fault signal
W3: Control signal for actuator
Maximum length of cables W2 = 30 m
BMS
Mains power 230 VAC
Fuse by others.
Fault current circuit breaker, minimum type B, 300 mA, super-resistant, characteristic K
Door air curtain
Unit no. 1
230 V / 50 Hz
Actuator
Type 146905
RI, depending on the model = 33, 50, 100 KOhm
Door air curtain
Unit no. n
230 V / 50 Hz
Actuator
Type 146905
RI, depending on the model = 33, 50, 100 KOhm
W1
W2
W3
2*
3
2
VH
0
0-10
GND

UniLine EC door air curtains, electromechanical model with fault signal monitoring (*T), electrical installation

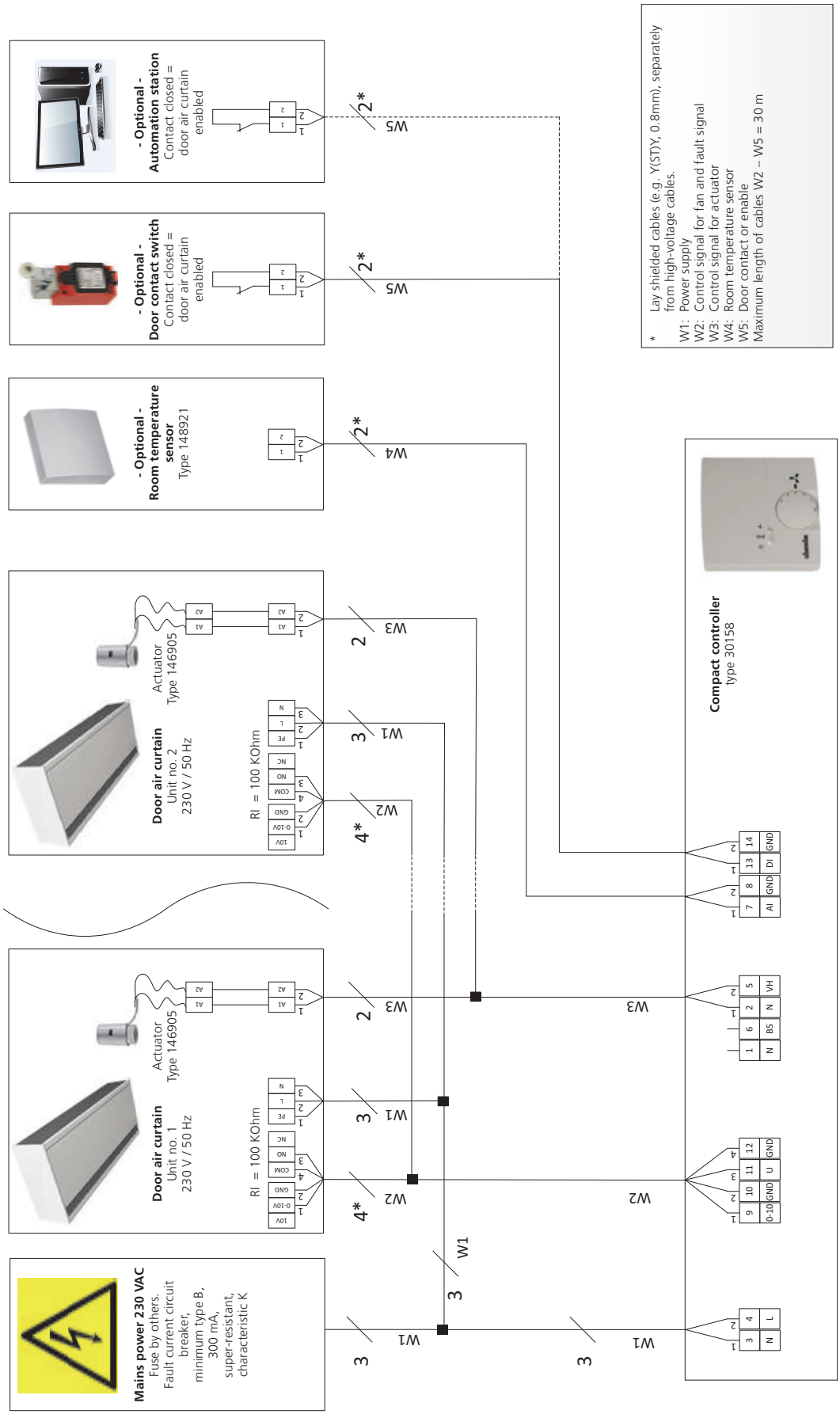

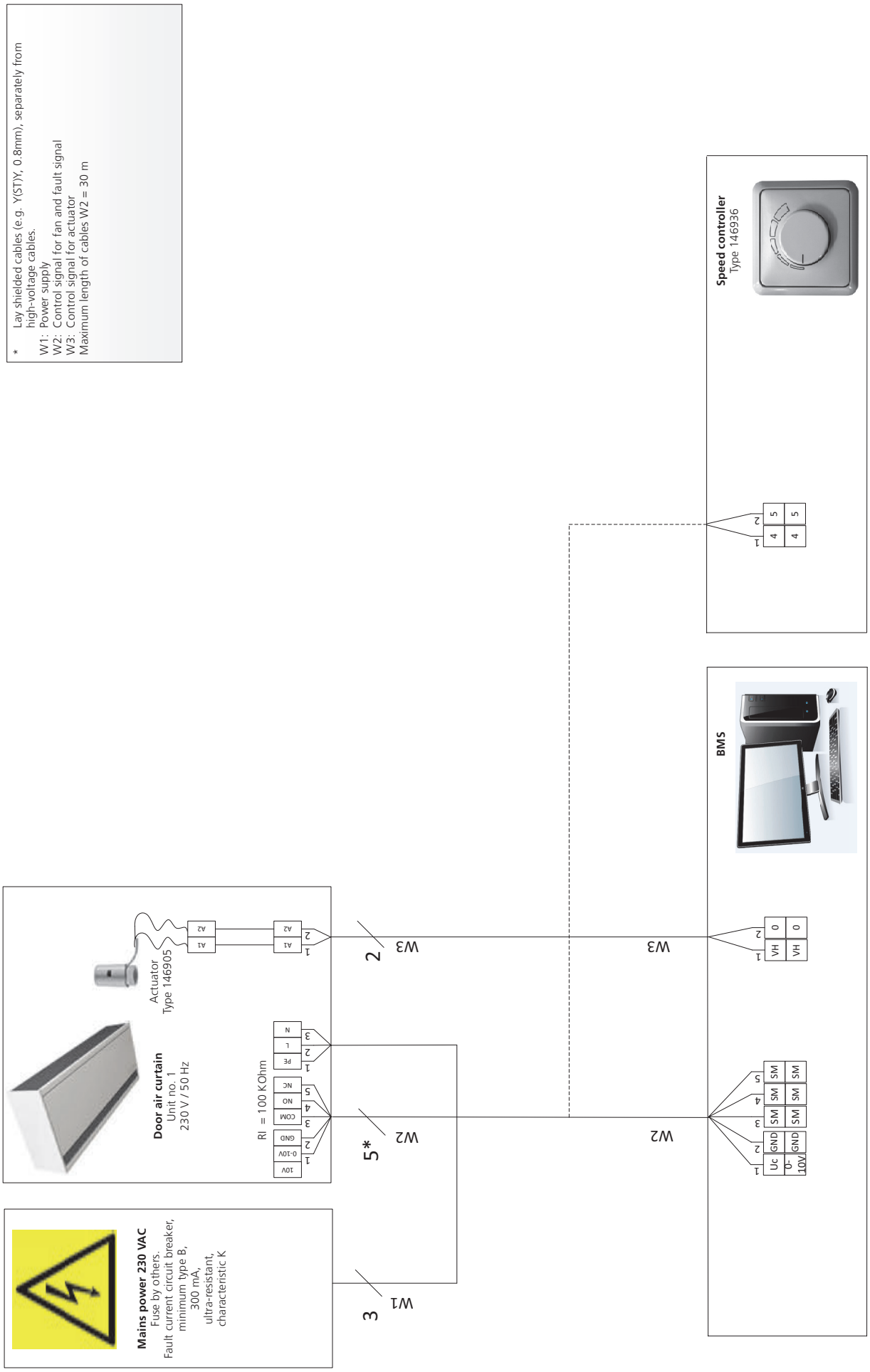
* Lay shielded cables (e.g. Y(ST)Y, 0.8mm), separately from high-voltage cables.
W1: Power supply
W2: Control signal for fan and fault signal
W3: Control signal for actuator
Maximum length of cables W2 = 30 m
Speed controller
Type 146936
BMS
Actuator
Type 146905
Door air curtain
Unit no. 1
230 V / 50 Hz
Rl = 100 KOhm
Mains power 230 VAC
Fuse by others.
Fault current circuit breaker, minimum type B, 300 mA, ultra-resistant, characteristic K
W1
W2
W3
5*
2
3

Description of KaControl
The all-inclusive solution for UniLine AC and EC

UniLine door air curtains with KaControl operating units are supplied fully wired and factory-fitted with all electrical parts ready for connection.

A high-performance parametrised microprocessor is designed to carry out all necessary functions. Each door air curtain is thus equipped with its own "intelligence" and can be operated in groups via Kampmann-T-LAN or CANbus networks. Door air curtains with KaControl can be equipped with plug-in communication interfaces for single room control mode or for control via higher-order control systems. Therefore, each basic unit has the potential for integration into a technical building network.

Electrical connection and commissioning

Each door air curtain with KaControl is supplied factory-fitted with a basic program and wired ready for operation with factory pre-settings for all control parameters. If required, the parameters can be accessed via the operating unit (KaController) on site and changed as needed. When using a communication card, it is also possible to set comfort parameters on the unit via IT networks or even directly via a notebook. Groups of up to six door air curtains can be commissioned with automatic addressing.

Electrical wiring

All electrical cables in the KaControl module unit are laid in the door air curtain. This includes mains supply and bus/communication cables in standard units. As a result, the installation costs can be kept to a minimum. Each door air curtain is fitted with an electrical fuse.

Motor protection

Any faults with the motor, e.g. overloading, are analysed by the electronics within the EC motor with KaControl. This shuts down the fans after several attempts to restart the motor and relays the fault message to the KaControl system. A fault message is issued via the operating unit. Faults on higher-level systems can also be relayed via a 24 V DC output or a data interface on the KaControl unit that is integrated into the door air curtain.

Control functions of KaControl for UniLine AC

The parametrisable KaControl offers a wide range of functions:

- 5-stage fan control
- activation of the unit depending on the room temperature
- control of hot water shut-off valve (heating) for Open / Close 230 V DC thermoelectric valve drives
- optional: integrated frost protection function via cable sensor
- integrated timer program for programming day and week switching functions in the KaController
- operation of several door air curtains via a control unit
- motor monitoring with fault signal processing
- optional: Interfaces for BMS connection (Modbus, LON, KNX), plug-in

Control functions of KaControl for UniLine EC

The parametrisable KaControl offers a wide range of functions:

- continuously variable fan control
- control of hot water shut-off valve (heating) for Open / Close 230 V AC thermoelectric valve drives
- optional: integrated frost protection function via cable sensor

- integrated timer program for programming day and week switching functions in the KaController
- operation of several door air curtains via a control unit
- motor monitoring with fault signal processing
- optional: Interfaces for BMS connection (Modbus, LON, KNX), plug-in

Integration of KaControl into different building management systems

KaControl provides interfaces and applications on all levels of modern building automation. The system – or parts of the system – can be linked into any building management strategies.

Field level

Room-based individual systems can be set up with a control unit via the Kampmann T-LAN bus or a CANbus system.

Room automation

The individual systems of several rooms can be combined to create a network via field bus interfaces. There is also the option of controlling units with difference modes of operation in a small database system.

Management / automation level

A CANbus system or connection via RS485 technology offers the option of functionally connecting units from the field layer with centralised ventilation units. A complete building management solution for ventilation and air conditioning technology can be set up using KaControl building management applications with a PC and industrial PC.

Integration into higher-level systems

KaControl offers the option of defined data transfer via BMS systems between the air conditioning system and higher-level management system. Defined communication profiles between KaControl and the management system can be used via the building management standards BACnet or LON.

KaController operating unit

The "face" of the KaControl building automation system: the KaController operating unit.

The KaController is very easy to use with its large display and one-touch operation. With the basic principle, "as little as possible, as much as required", even untrained users can intuitively get to grips with the control options.

The basic functions for comfortable interior temperatures are set in a user-friendly way using the KaController.

Product features of the KaController

- high-quality designed wall-mounted room operating units
- available with or without function buttons on the side
- plastic housing, colour similar to RAL 9010
- communication interface to Kampmann T-LAN bus system
- large display with automatic back light
- integral room temperature sensor
- push-turn navigator dial with endless turn/lock function
- built-in weekly switching program
- password-protected parameter level

UniLine AC and UniLine EC door air curtains with KaControl, electrical installation

Single-circuit control – system configuration for max. 6 or 30 door air curtains

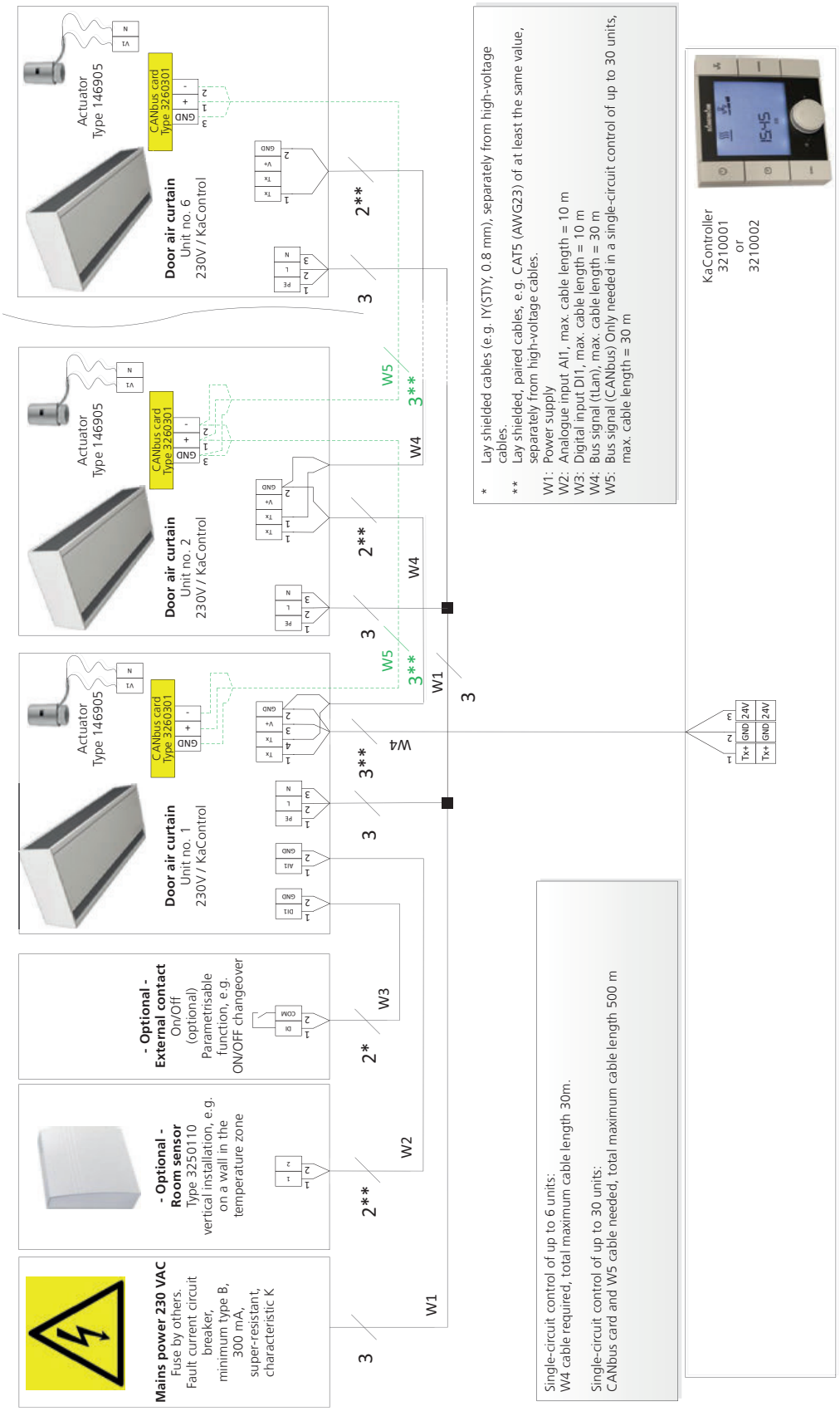

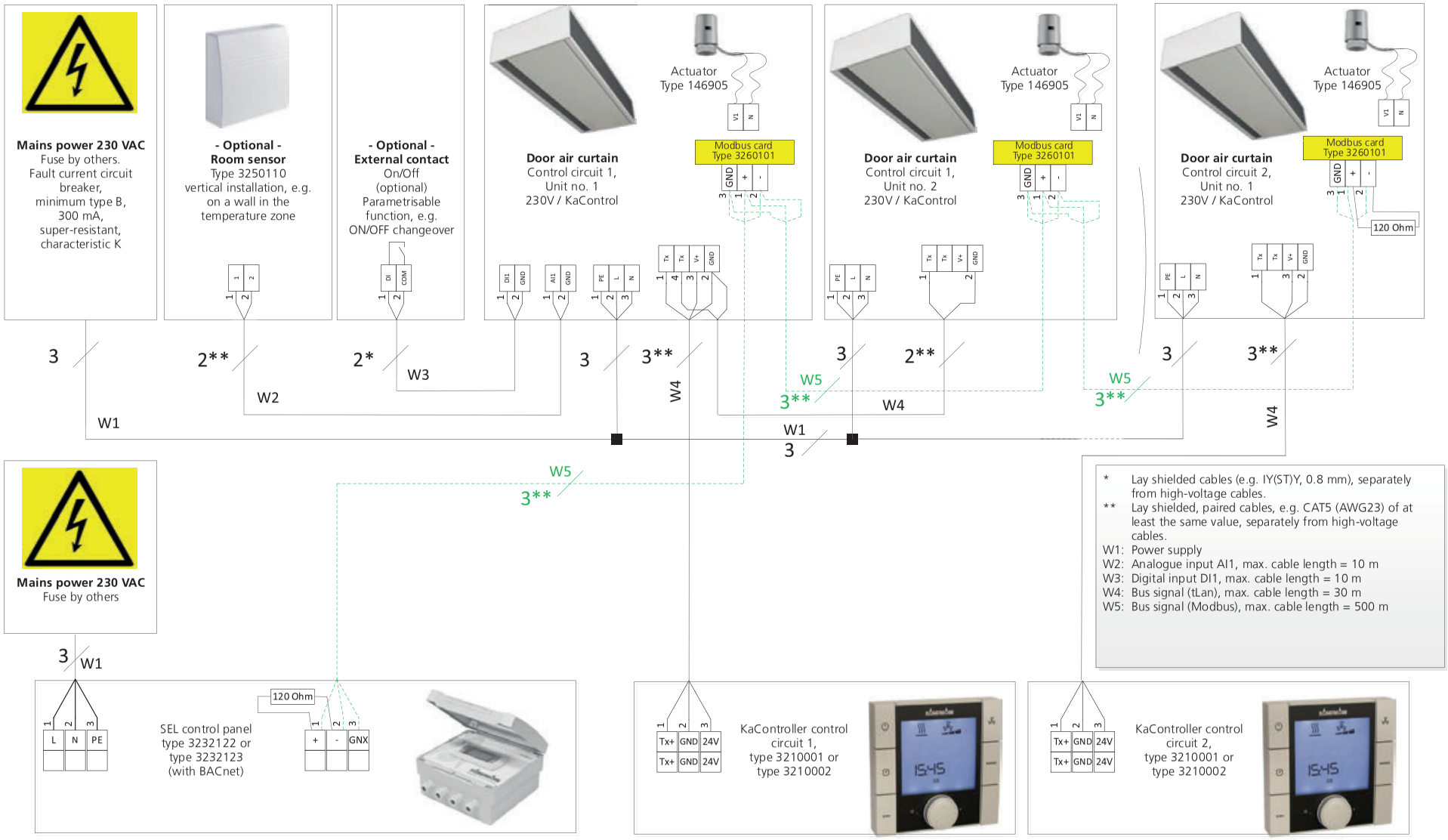
Mains power 230 VAC
Fuse by others.
Fault current circuit breaker, minimum type B, 300 mA, super-resistant, characteristic K
- Optional -
Room sensor
Type 3250110
vertical installation, e.g. on a wall in the temperature zone
- Optional -
External contact
On/Off (optional)
Parametrisable function, e.g. ON/OFF changeover
Door air curtain
Control circuit 1, Unit no. 1
230V / KaControl
Actuator Type 146905
Modbus card Type 3260101
Door air curtain
Control circuit 1, Unit no. 2
230V / KaControl
Actuator Type 146905
Modbus card Type 3260101
Door air curtain
Control circuit 2, Unit no. 1
230V / KaControl
Actuator Type 146905
Modbus card Type 3260101
120 Ohm
3
2**
2*
3**
W1
W2
W3
W4
W5
Mains power 230 VAC
Fuse by others
SEL control panel type 3232122 or type 3232123 (with BACnet)
KaController control circuit 1, type 3210001 or type 3210002
KaController control circuit 2, type 3210001 or type 3210002
* Lay shielded cables (e.g. IY(ST)Y, 0.8 mm), separately from high-voltage cables.
** Lay shielded, paired cables, e.g. CAT5 (AWG23) of at least the same value, separately from high-voltage cables.
W1: Power supply
W2: Analogue input AI1, max. cable length = 10 m
W3: Digital input DI1, max. cable length = 10 m
W4: Bus signal (tLan), max. cable length = 30 m
W5: Bus signal (Modbus), max. cable length = 500 m

05 Ordering information

UniLine

Model	Max. discharge height[1]	Unit model	Motor version	Length[2]	Heat output[3]	Air volume	Sound pressure level[4]	Sound power level	Control option	Art. no.
	[m]			[mm]	[kW]	[m³/h]	[dB(A)]	[dB(A)]		
10	2.3 - 3.0	Unit including casing	AC	1000	6.7 – 10.2	600 - 1390	38 - 59	54 - 75	electro-mechanical	**253000510330**
									KaControl	**253000510330C1**
									KaControl + frost protection	**253000510330C15**
									Power module	**253000510330P**
									Power module + frost protection	**253000510330PF**
			EC	1000	3.4 – 10.3	290 - 1410	27 - 56	43 – 72	electro-mechanical	**253003510330**
									electro-mechanical with fault signal monitoring	**253003510330T**
									KaControl	**253003510330C1**
									KaControl + frost protection	**253003510330C15**
15	2.3 - 3.0	Unit including casing	AC	1500	9.6 – 17.4	930 - 2130	39 - 60	55 - 76	electro-mechanical	**253000515330**
									KaControl	**253000515330C1**
									KaControl + frost protection	**253000515330C15**
									Power module	**253000515330P**
									Power module + frost protection	**253000515330PF**
			EC	1500	5.3 – 19.5	410 - 2540	31 - 57	47 - 73	electro-mechanical	**253003515330**
									electro-mechanical with fault signal monitoring	**253003515330T**
									KaControl	**253003515330C1**
									KaControl + frost protection	**253003515330C15**
20	2.3 - 3.0	Unit including casing	AC	2000	13.1 – 24.2	1210 - 2820	41 - 61	57 - 77	electro-mechanical	**253000520330**
									KaControl	**253000520330C1**
									KaControl + frost protection	**253000520330C15**
									Power module	**253000520330P**
									Power module + frost protection	**253000520330PF**
			EC	2000	7.6 – 24.1	580 - 2820	30 - 59	46 - 75	electro-mechanical	**253003520330**
									electro-mechanical with fault signal monitoring	**253003520330T**
									KaControl	**253003520330C1**
									KaControl + frost protection	**253003520330C15**
25	2.3 - 3.0	Unit including casing	AC	2500	18.0 – 33.9	1660 - 4000	42 - 62	58 - 78	electro-mechanical	**253000525330**
									KaControl	**253000525330C1**
									KaControl + frost protection	**253000525330C15**
									Power module	**253000525330P**
									Power module + frost protection	**253000525330PF**
			EC	2500	9.6 – 33.7	710 – 3980	33 - 60	49 - 76	electro-mechanical	**253003525330**
									electro-mechanical with fault signal monitoring	**253003525330T**
									KaControl	**253003525330C1**
									KaControl + frost protection	**253003525330C15**
30	2.3 - 3.0	Unit including casing	AC	3000	24.1 – 44.2	2210 - 5330	44 - 64	60 - 80	electro-mechanical	**253000530330**
									KaControl	**253000530330C1**
									KaControl + frost protection	**253000530330C15**
									Power module	**253000530330P**
									Power module + frost protection	**253000530330PF**
			EC	3000	11.1 – 42.8	810 - 5080	34 - 60	50 - 76	electro-mechanical	**253003530330**
									electro-mechanical with fault signal monitoring	**253003530330T**
									KaControl	**253003530330C1**
									KaControl + frost protection	**253003530330C15**

more »

1) at low to medium pressure, requirements and conditions, see page 23
2) including casing elements
3) at LPHW 75/65°C, t_{L1} = 20°C
4) The sound pressure levels were calculated based on an assumed room insulation of 16 dB(A). This corresponds to a distance of 3 m, a room volume of 2000 m³ and a reverberation time of 1.0 s (in accordance with VDI 2081).

Cassette UniLine for 625 mm ceiling grid

Model	Max. discharge height[1]	Unit model	Motor version	Length[2]	Heat output[3]	Air volume	Sound pressure level[4]	Sound power level	Control option	Art. no.
	[m]			[mm]	[kW]	[m³/h]	[dB(A)]	[dB(A)]		
10	2.3 - 3.0	In-ceiling unit for 625x625 mm ceiling grid	AC	1035	6.7 – 10.2	600 - 1390	38 - 59	54 - 75	electro-mechanical	253000610330
									KaControl	253000610330C1
									KaControl + frost protection	253000610330C15
									Power module	253000610330P
									Power module + frost protection	253000610330PF
			EC	1035	3.4 – 10.3	290 - 1410	27 - 56	43 – 72	electro-mechanical	253003610330
									electro-mechanical with fault signal monitoring	253003610330T
									KaControl	253003610330C1
									KaControl + frost protection	253003610330C15
15	2.3 - 3.0	In-ceiling unit for 625x625 mm ceiling grid	AC	1535	9.6 – 17.4	930 - 2130	39 - 60	55 - 76	electro-mechanical	253000615330
									KaControl	253000615330C1
									KaControl + frost protection	253000615330C15
									Power module	253000615330P
									Power module + frost protection	253000615330PF
			EC	1535	5.3 – 19.5	410 - 2540	31 - 57	47 - 73	electro-mechanical	253003615330
									electro-mechanical with fault signal monitoring	253003615330T
									KaControl	253003615330C1
									KaControl + frost protection	253003615330C15
20	2.3 - 3.0	In-ceiling unit for 625x625 mm ceiling grid	AC	2035	13.1 – 24.2	1210 - 2820	41 - 61	57 - 77	electro-mechanical	253000620330
									KaControl	253000620330C1
									KaControl + frost protection	253000620330C15
									Power module	253000620330P
									Power module + frost protection	253000620330PF
			EC	2035	7.6 – 24.1	580 - 2820	30 - 59	46 - 75	electro-mechanical	253003620330
									electro-mechanical with fault signal monitoring	253003620330T
									KaControl	253003620330C1
									KaControl + frost protection	253003620330C15
25	2.3 - 3.0	In-ceiling unit for 625x625 mm ceiling grid	AC	2535	18.0 – 33.9	1660 - 4000	42 - 62	58 - 78	electro-mechanical	253000625330
									KaControl	253000625330C1
									KaControl + frost protection	253000625330C15
									Power module	253000625330P
									Power module + frost protection	253000625330PF
			EC	2535	9.6 – 33.7	710 – 3980	33 - 60	49 - 76	electro-mechanical	253003625330
									electro-mechanical with fault signal monitoring	253003625330T
									KaControl	253003625330C1
									KaControl + frost protection	253003625330C15

more »

1) at low to medium pressure, requirements and conditions, see page 23
2) including casing elements
3) at LPHW 75/65°C, t_{L1} = 20°C
4) The sound pressure levels were calculated based on an assumed room insulation of 16 dB(A). This corresponds to a distance of 3 m, a room volume of 2000 m³ and a reverberation time of 1.0 s (in accordance with VDI 2081).

Cassette UniLine for 600 mm ceiling grid

Model	Max. discharge height[1]	Unit model	Motor version	Length[2]	Heat output[3]	Air volume	Sound pressure level[4]	Sound power level	Control option	Art. no.
	[m]			[mm]	[kW]	[m³/h]	[dB(A)]	[dB(A)]		
10	2.3 - 3.0	In-ceiling unit for 600x600 mm ceiling grid	AC	1035	6.7 – 10.2	600 - 1390	38 - 59	54 - 75	electro-mechanical	**253000710330**
									KaControl	**253000710330C1**
									KaControl + frost protection	**253000710330C15**
									Power module	**253000710330P**
									Power module + frost protection	**253000710330PF**
			EC	1035	3.4 – 10.3	290 - 1410	27 - 56	43 – 72	electro-mechanical	**253003710330**
									electro-mechanical with fault signal monitoring	**253003710330T**
									KaControl	**253003710330C1**
									KaControl + frost protection	**253003710330C15**
15	2.3 - 3.0	In-ceiling unit for 600x600 mm ceiling grid	AC	1535	9.6 – 17.4	930 - 2130	39 - 60	55 - 76	electro-mechanical	**253000715330**
									KaControl	**253000715330C1**
									KaControl + frost protection	**253000715330C15**
									Power module	**253000715330P**
									Power module + frost protection	**253000715330PF**
			EC	1535	5.3 – 19.5	410 - 2540	31 - 57	47 - 73	electro-mechanical	**253003715330**
									electro-mechanical with fault signal monitoring	**253003715330T**
									KaControl	**253003715330C1**
									KaControl + frost protection	**253003715330C15**
20	2.3 - 3.0	In-ceiling unit for 600x600 mm ceiling grid	AC	2035	13.1 – 24.2	1210 - 2820	41 - 61	57 - 77	electro-mechanical	**253000720330**
									KaControl	**253000720330C1**
									KaControl + frost protection	**253000720330C15**
									Power module	**253000720330P**
									Power module + frost protection	**253000720330PF**
			EC	2035	7.6 – 24.1	580 - 2820	30 - 59	46 - 75	electro-mechanical	**253003720330**
									electro-mechanical with fault signal monitoring	**253003720330T**
									KaControl	**253003720330C1**
									KaControl + frost protection	**253003720330C15**
25	2.3 - 3.0	In-ceiling unit for 600x600 mm ceiling grid	AC	2535	18.0 – 33.9	1660 - 4000	42 - 62	58 - 78	electro-mechanical	**253000725330**
									KaControl	**253000725330C1**
									KaControl + frost protection	**253000725330C15**
									Power module	**253000725330P**
									Power module + frost protection	**253000725330PF**
			EC	2535	9.6 – 33.7	710 – 3980	33 - 60	49 - 76	electro-mechanical	**253003725330**
									electro-mechanical with fault signal monitoring	**253003725330T**
									KaControl	**253003725330C1**
									KaControl + frost protection	**253003725330C15**

[1] at low to medium pressure, requirements and conditions, see page 23
[2] including casing elements
[3] at LPHW 75/65°C, t_{L1} = 20°C
[4] The sound pressure levels were calculated based on an assumed room insulation of 16 dB(A). This corresponds to a distance of 3 m, a room volume of 2000 m³ and a reverberation time of 1.0 s (in accordance with VDI 2081).

Accessories

Figure	Article	Properties	suitable for		Art. No.
	Replacement filter mats				
	Replacement filter mats	1 set = 5 brackets	UniLine	Model 10	**253000510820**
				Model 15	**253000515820**
				Model 20	**253000520820**
				Model 25	**253000525820**
				Model 30	**253000530820**
			Cassette UniLine	Model 10	**253000610820**
				Model 15	**253000615820**
				Model 20	**253000620820**
				Model 25	**253000625820**
	Brackets				
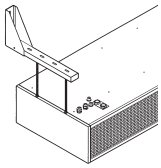	**Wall brackets**	1 set = 2 brackets	UniLine	Models 10 – 25	**253000500890**
		1 set = 3 brackets		Model 30	**253000500892**
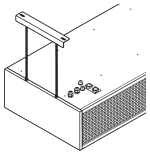	**Ceiling brackets**	1 set = 2 brackets	UniLine	Models 10 – 25	**253000500895**
		1 set = 3 brackets		Model 30	**253000500897**
	Valves				
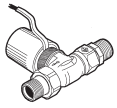	**Thermoelectric shut-off valve**	230 V, 3/4" for KaControl and stage switch	all UniLine	all models	**196000100912**
	Outlet temperature limit valve	¾", temperature setting range 20 – 50°C	all UniLine		**196000100967**

more »

Control accessories for UniLine AC

Figure	Article	Properties	suitable for		Art. No.
Control accessories, electromechanical					
	5-stage switch	0-1-2-3-4-5, surface-mounted	All UniLine with AC motors and electromechanical control	all models	**196000100925**
	5-stage switch	0-1-2-3-4-5, flush-mounted			**196000100926**
	5-stage summer-winter switch	0-1-2-3-4-5, surface-mounted (only for use in conjunction with thermoelectric shut-off valve)			**196000100928**
	5-stage summer-winter switch	0-1-2-3-4-5, flush-mounted (only for use in conjunction with thermoelectric shut-off valve)			**196000100929**
	Cascade module	for the parallel operation of two units by a stage switch			**196000100906**
	Frost protection thermostat	Type 30268, loose Protection type IP 40, protection class B W x H x D: 105 x 112 x 55 mm			**196000030268**

more »

Control accessories for UniLine EC

Figure	Article	Properties	suitable for	Art. No.
Control accessories for electromechanical control (*00) and electromechanical control with fault signal evaluation (*T)				
	Speed controller	For continuously variable flush-mounted unit	All models with control configuration *T	**194000146936**
	Surface-mounted frame	For surface-mounted installation of the speed controller 194000146936	All models with control configuration *T	**196000148915**
	Compact controller	Compact controller for speed control and surface-mounted room temperature control	All models with control configuration *00 and *T	**196000030158**

more »

Calculation accessories for UniLine AC and EC

Figure	Article	Properties	suitable for	Art. No.
	KaControl accessories			
	KaController room control unit with one-key operation	Control unit, wall-mounted, in high-grade design, plastic housing, colour similar to RAL 9010, large LCD multifunctional display, integrated room temperature sensor, communication interface to Kampmann T-LAN bus system, automatically switching LED back light, press/turn dial with click stop function, individually adjustable basic display, integrated day, night and week program, password-protected parameter level for C1 control option	All UniLine C1 with AC and EC motors	**196003210001**
	KaController room control unit with side operating keys	For quick access to fan settings, operating modes, Eco mode, time and timer program, otherwise as art. no. 196003210001		**196003210002**
	KaControl room temperature sensor	For wall mounting, IP30 surface-mounted, colour white RAL 9010, alternative to the temperature sensor in the KaController		**196003250110**
	Serial CANBus card	To increase the number of units in a single-circuit control system		**196003260301**
	Cable sensor	Length 600 mm, with plug, to protect unit against frost		**196003250114**
	Serial Modbus card	For the formation of a Modbus network, single-circuit control or multi-circuit control		**196003260101**
	SEL control panel	KaControl electronics including KaControl control unit for the centralised control of Kampmann products via a central bus communication (Modbus) in a wall-mounted housing		**196003232122**
	SEL control panel BACnet	KaControl electronics with integrated BACnet interface including KaControl control unit for the centralised control of Kampmann products via a central bus communication (Modbus) in a wall-mounted housing		**196003232123**

Kampmann.co.uk/uniline

Kampmann GmbH
Friedrich-Ebert-Str. 128 - 130
49811 Lingen (Ems)
Germany

T +49 591 7108-660
F +49 591 7108-173
E export@kampmann.de
W Kampmann.eu

Kampmann UK Ltd.
Dial House, Govett Avenue
Shepperton, Middlesex, TW17 8AG
Great Britain

T +44 (0)1932 228592
F +44 (0)1932 228949
E info@kampmann.co.uk
W Kampmann.co.uk

423/01/17 GB